DELTA

12"-14" RADIAL SAW "MODEL 40C" (OLD STYLE)

RAS-4

Revised 4-1-85

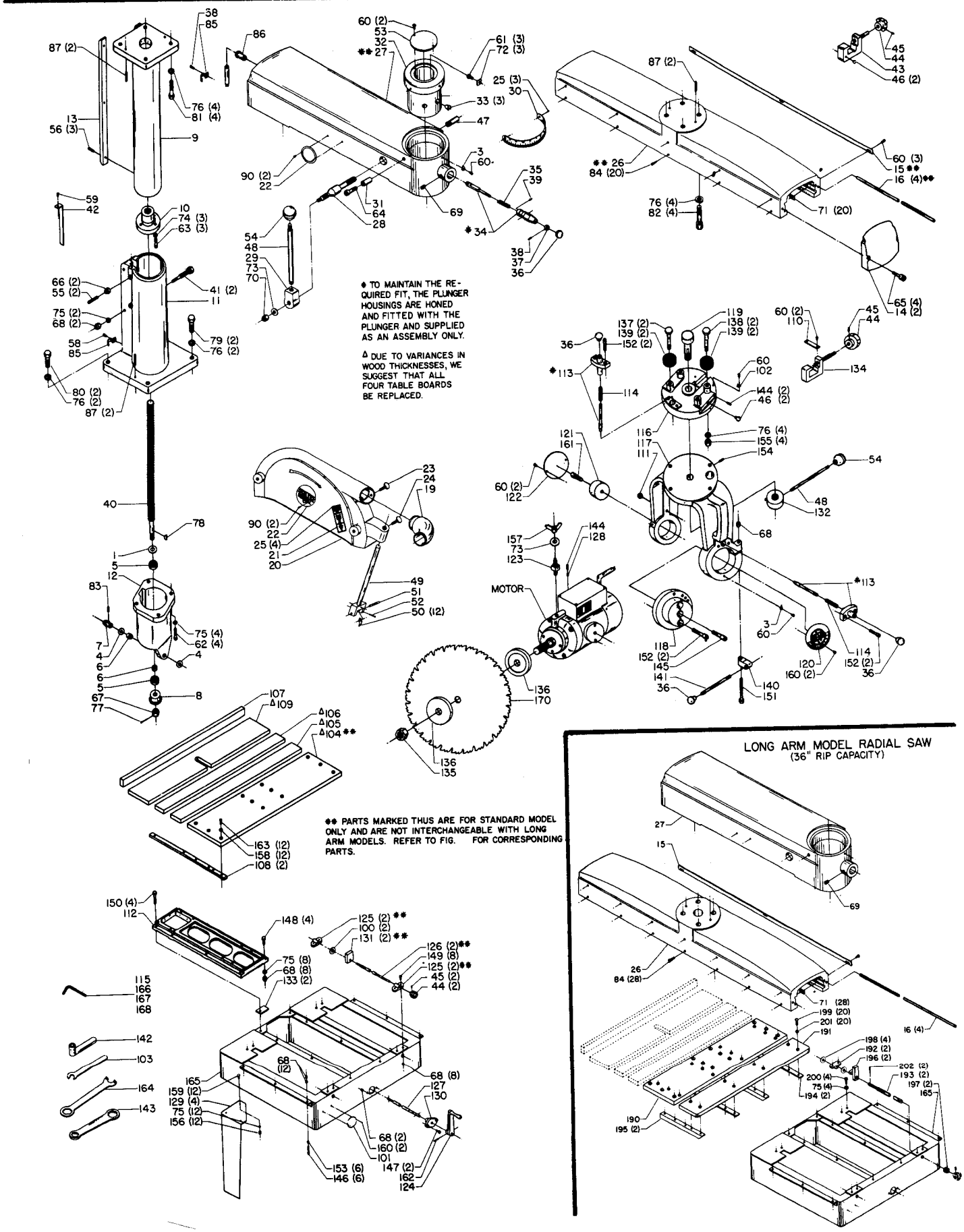

Replacement Parts

Ref. No.	Part No.	Description
1	904-01-030-1649	Washer
3	424-04-075-0001	Pointer
4	920-76-021-3909	Thrust Bearing
5	920-52-011-3924	Bearing
6	920-24-061-3962	Bearing
7	424-02-351-0001	Gear
8	424-02-351-0001	Gear
9	424-03-030-0002	Column
10	929-76-010-6318	Elevating Nut
11	424-03-005-0009	Column Base
12	424-03-013-0001	Column Housing
13	424-03-004-0006	Column Key
14	424-03-031-0006	Track End Cover
15	951-02-011-3958	Rip Scale for Std. Arm 30" Rip Capacity, 2H.P. Single Ph. & 3 H.P. Three Ph. Models
15	951-02-011-3956	Rip Scale for Std. Arm 31-3/8" Rip Capacity, 3 H.P. Single Ph. & 5 H.P. Three Ph. Models
16	424-03-108-0003	Ball Race Rod for Std. Arm
19	424-03-036-0001	Dust Deflector
20	424-03-354-0010	14" Guard, Incl:
21	960-04-010-1887	Caution & Rotation Plate
22	960-02-010-1886	Nameplate
23	901-04-260-1505	1/4-20 X 1/2" Thumb Screw
24	901-04-260-1527	5/16-18 X 3/4" Thumb Screw
25	901-06-450-2252	#2 X 3/16" Drive Screw
26	424-03-055-0003	Track for Std. Arm Model
27	424-03-089-0007	Arm for Std. Models
22	960-02-010-1861	Nameplate
90	901-06-450-2250	#2 X 3/16" Drive Screw
28	424-03-111-0006	Stud
29	424-03-014-0011	Bracket
30	951-02-011-3974	Miter Scale
31	424-03-017-0003	Spacer Bushing
32	424-03-030-0006	Column
33	424-03-074-0001	Plug
34	424-03-388-0003	Stop, Incl:
35	928-01-041-5310	Spring
36	931-01-021-4099	Knob
37	902-01-010-1300	5/16"-18 Hex Nut
38	905-01-010-6731	5/64 X 1/2" Roll Pin
39	901-06-450-8210	#00 X 1/8" Drive Screw
40	424-03-112-0002	Elevating Screw
41	424-04-111-0002	Spreader Stud
42	424-04-052-0001.	Gib
43	1087358	Stop, Incl:
44	931-02-991-4794	Knob, Incl:
45	901-04-150-0235	#10-24 X 3/8" Soc. Hd. Set Scr.
46	424-03-016-0002	Rubber Bumper
47	424-04-061-0001	Conduit
48	424-04-111-0003	Lock Rod
49	424-04-408-0004	Anti-Kickback Rod, Incl:
50	424-04-047-0002	Anti-Kickback Finger
51	424-04-071-0013	Anti-Kickback Finger Pan
52	Cannot Furnish	1/16 X 1" Cotter Pin
53	424-04-031-0009	Cover
54	931-01-011-4091	Knob
55	Cannot Furnish	5/16-18 X 1-1/2" Soc. Hd. Set Scr.
56	901-02-030-0406	1/4-20 X 3/4" Flat Hd. Scr.
58	901-02-010-0509	1/4-20 X 1/2" Rd.Hd. Scr.
59	901-02-010-0514	1/4-20 X 3/8" Rd. Hd. Scr.
60	901-02-010-0558	#8-32 X 1/4" Rd. Hd. Scr.
61	901-01-060-0605	5/16-18 X 1/2" Hex Hd. Cap Scr.
62	901-01-060-0648	3/8-16 X 1-1/4" Hex Hd. Cap Scr.
63	901-01-060-0649	5/16-18 X 1" Hex Hd. Cap Scr.
64	Cannot Furnish	1/4-20 X 1" Soc. Hd. Cap Scr.
65	901-03-010-0791	3/8-16 X 3/4" Soc. Hd. Cap Scr.
66	902-01-020-5435	5/16"-18 Hex Jam Nut
67	902-01-150-1011	1/2"-13 Hex Nut
68	902-01-040-1026	3/8"-16 Hex Nut
69	901-04-170-1104	1/4-20 X 1/4" Soc. Hd. Set Scr.
70	902-01-010-1207	3/8"-24 Hex Nut
71	902-03-000-1234	Speed Nut
72	904-10-091-2444	11/32 Special Washer
73	904-01-010-1606	3/8" Washer
74	904-02-010-1703	5/16" Lockwasher
75	904-02-020-1704	3/8" Lockwasher
76	905-02-020-1705	1/2" Lockwasher
77	905-05-040-2106	1/8 X 1-1/4" Cotter Pin
25	901-06-450-2252	#2 X 3/16" Drive Screw
78	927-01-010-2607	Key
79	901-01-060-3109	1/2-13 X 2-1/2" Hex Hd. Cap Scr.
80	901-01-060-3117	1/2-13 X 2" Hex Cap Scr.
81	901-01-060-3120	1/2-13 X 1-3/4" Hex Cap Scr.
82	901-03-010-3308	1/2-13 X 1-3/4" Soc. Hd. Cap Scr.
83	905-02-010-5030	3/16 X 3/4" Groove Pin
84	901-05-130-6101	Rd. Hd. Self-Tapping Scr.
85	Cannot Furnish	3/8" Pipe Clamp
86	Cannot Furnish	#3 Anti-Short Bushing
87	905-02-010-7105	1/4 X 1-1/4" Groove Pin
90	901-06-450-2250	#4 X 3/16 Drive Screw
100	904-01-031-2905	33/64 X 7/8 X 1/16" Stl. Washer
101	Nameplate	By Request Only
102	951-01-021-3951	Pointer
103	955-01-030-1488	Wrench
3	424-04-075-0001	Pointer
44	931-02-991-4794	Knob, Incl:
45	901-04-150-6215	1/4-20 X 3/8" Soc. Hd. Set Scr.

Ref. No.	Part No.	Description
104	424-03-011-0001	Table Board for Std. Arm Models
105	424-03-011-0002	Table Board 3-1/2"
106	424-03-011-0003	Table Board 3"
107	424-03-011-0004	Fence
108	424-03-004-0001	Table Adj. Bar for Std. Arm Models
109	424-03-011-0005	Table Board 7"
110	424-03-072-0004	Rip Lock Hold Down Plate
111	424-03-016-0001	Rubber Bumper
112	424-03-005-0002	Table Base
46	424-03-016-0002	Rubber Bumper
113	424-03-388-0001	Stop, Incl:
36	931-01-021-4099	Knob
114	928-01-041-5310	Spring
115	955-03-020-2168	5/32" Hex Soc. Wrench
116	424-03-057-0001	Head
117	424-03-102-0003	Yoke
118	424-03-095-0003	Front Trunnion
119	424-03-071-0007	Yoke Pin
120	951-02-011-3962	Bevel Scale
121	424-03-095-0004	Trunnion
122	424-03-031-0007	Cover
123	424-03-111-0005	Stud
124	424-03-333-0001	Crank
125	424-03-014-0014	Bracket for Std. Arm Models
126	424-03-106-0005	Screw for Std. Arm Models
127	424-03-106-0006	Elevating Shaft
128	424-01-074-0001	Plug
129	424-04-066-0001	Leg
130	424-04-017-0001	Bearing
131	424-04-027-0001	Nut
132	902-08-061-3072	Lock Nut
48	424-04-111-0003	Lock Rod
133	424-04-004-0008	Bar
36	931-01-021-4099	Knob
134	424-04-327-0002	Clamp, Incl:
44	931-02-991-4794	Knob, Incl:
45	901-04-150-6215	1/4-20 X 3/8" Soc. Hd. Set Scr.
135	424-04-027-0009	Arbor Nut
136	424-04-103-0001	Arbor Flange
137	424-04-111-0005	Stationary Bearing Stud
138	424-04-111-0006	Eccentric Bearing Stud
139	920-10-151-4919	Bearing
140	424-04-027-0004	Bevel Lock Nut
141	901-07-261-3234	Bevel Lock Rod
142	955-01-090-1494	Roller Head Wrench
143	955-01-020-0021	Wrench
54	931-01-011-4091	Knob
144	901-04-150-0202	1/4-20 X 1/2" Soc. Hd. Set Scr.
145	901-03-010-0228	1/2-13 X 1-1/4" Soc Hd. Cap Scr.
146	901-04-020-0324	3/8-16 X 2" Sq. Hd. Set Scr.
147	901-02-030-0417	3/8-16 X 1" Flat Hd. Scr.
60	901-02-010-0558	#8-32 X 1/4" Rd. Hd. Scr.
148	901-01-060-0617	3/8-16 X 1-1/2" Hex Hd. Cap Scr.
149	901-01-060-0642	3/8-16 X 1" Hex Hd. Cap Scr.
150	901-01-060-0646	3/8-16 X 2" Hex Hd. Cap Scr.
151	901-01-060-0695	3/8-16 X 2-3/4" Hex Hd. Cap Scr.
152	901-03-010-0784	3/8-16 X 1-1/4" Soc. Hd. Cap Scr.
153	902-01-040-1005	3/8"-16 Hex Jam Nut
68	902-01-040-1026	3/8"-16 Hex Nut
154	901-04-160-1103	5/16-18 X 5/8" Soc. Hd. Set Scr.
155	902-01-020-1227	1/2"-20 Hex Jam Nut
156	902-02-040-1307	3/8"-16 Sq. Nut
157	902-04-010-1404	3/8"-16 Wing Nut
73	904-01-010-1606	3/8" Washer
158	904-01-010-1615	3/8" Washer
75	904-02-020-1704	3/8" Lockwasher
76	904-02-020-1705	1/2" Lockwasher
159	901-11-010-2375	3/8-16 X 1" Sq. Hd. Bolt
160	901-06-110-3000	#6-32 X 1/4" Self-Tapping Scr.
161	Cannot Furnish	1/2-13 X 3/4" Soc. Hd. Cap Scr.
162	905-02-010-5045	3/16 X 1-1/2" Groove Pin
163	901-02-010-7502	3/8-16 X 1" Rd. Hd. Scr.
164	955-02-100-1492	Wrench
165	424-03-305-0009	Base Frame
166	Cannot Furnish	1/4" Hex Soc. Wrench
167	48273	1/8" Hex Soc. Wrench
168	955-03-010-0004	5/16" Hex Soc. Wrench
170	33-197	12" Saw Blade
170	33-179	14" Saw Blade

LONG ARM MODEL RADIAL SAW (36" RIP CAPACITY)

15	951-02-011-4343	Rip Scale for Long Arm 36" Rip Capacity, 2 H.P. Single Ph. & 3 H.P. Three Ph Models
15	951-02-011-4344	Rip Scale for Long Arm 37-3/8" Rip Capacity, 3 H.P. Single Ph. & 5 H.P. Three Ph. Models
16	424-03-108-0005	Ball Race Rod for Long Arm Models
26	424-03-055-0004	Track for Long Arm Models
27	424-03-089-0009	Arm for Long Arm Model s
69	901-04-170-1104	1/4-20 X 1/4" Soc. Hd. Set Scr.
71	902-03-000-1234	Speed Nut
75	904-02-020-1704	3/8" Lockwasher
84	901-05-130-6101	Self Tapping Screw
165	424-03-305-0009	Base Frame
190	424-03-011-0011	Table Board for Long Arm Models
191	424-03-011-0012	Front Table Board for Long Arm Models
192	424-03-014-0017	Fence Clamp Bracket for Long Arm Models
193	424-03-112-0003	Fence Clamp Screw for Long Arm Models
194	424-03-304-0009	Bar for Long Arm Models
195	424-03-304-0009	Bar for Long Arm Models
196	424-03-327-0003	Fence Clamping Nut for Long Arm Models
197	961-03-010-2865	Grommet for Long Arm Models
198	904-01-030-1650	25/64 X 11/16 X 1/16" Special Washer
199	901-02-010-0511	1/4-20 X 7/8" Rd. Hd. Scr.
200	901-01-060-0640	3/8-16 X 3/4" Hex Hd. Scr.
201	904-01-010-1614	1/4" Washer
202	905-05-040-2101	3/32 X 5/8" Cotter Pin

LITHO U. S. A.