6 Motorized Jointer

(Model 37-285)

INSTRUCTION MANUAL

Record this information for future reference.

SERIAL NO. _____

DATE OF PURCHASE _____

See Table of Contents for location of Serial No.

DATED 1-20-99

PART NO. 1347169

DELTA

TABLE OF CONTENTS

SAFETY RULES

Woodworking can be dangerous if safe and proper operating procedures are not followed. As with all machinery, there are certain hazards involved with the operation of the product. Using the machine with respect and caution will considerably lessen the possibility of personal injury. However, if normal safety precautions are overlooked or ignored, personal injury to the operator may result. Safety equipment such as guards, push sticks, hold-downs, featherboards, goggles, dust masks and hearing protection can reduce your potential for injury. But even the best guard won't make up for poor judgment, carelessness or inattention. Always use common sense and exercise caution in the workshop. If a procedure feels dangerous, don't try it. Figure out an alternative procedure that feels safer. REMEMBER: Your personal safety is your responsibility.

This machine was designed for certain applications only. Delta Machinery strongly recommends that this machine not be modified and/or used for any application other than that for which it was designed. If you have any questions relative to a particular application, DO NOT use the machine until you have first contacted Delta to determine if it can or should be performed on the product.

DELTA INTERNATIONAL MACHINERY CORP.
MANAGER OF TECHNICAL SERVICES
246 ALPHA DRIVE
PITTSBURGH, PENNSYLVANIA 15238
(IN CANADA: 644 IMPERIAL ROAD, GUELPH, ONTARIO N1H 6M7)

WARNING: FAILURE TO FOLLOW THESE RULES MAY RESULT IN SERIOUS PERSONAL INJURY

1. FOR YOUR OWN SAFETY, READ INSTRUCTION MANUAL BEFORE OPERATING THE TOOL. Learn the tool's application and limitations as well as the specific hazards peculiar to it.

2. KEEP GUARDS IN PLACE and in working order.

3. ALWAYS WEAR EYE PROTECTION.

4. REMOVE ADJUSTING KEYS AND WRENCHES. Form habit of checking to see that keys and adjusting wrenches are removed from tool before turning it on.

5. KEEP WORK AREA CLEAN. Cluttered areas and benches invite accidents.

6. DON'T USE IN DANGEROUS ENVIRONMENT. Don't use power tools in damp or wet locations, or expose them to rain. Keep work area well-lighted.

7. KEEP CHILDREN AND VISITORS AWAY. All children and visitors should be kept a safe distance from work area.

8. MAKE WORKSHOP CHILDPROOF with padlocks, master switches, or by removing starter keys.

9. DON'T FORCE TOOL. It will do the job better and be safer at the rate for which it was designed.

10. USE RIGHT TOOL. Don't force tool or attachment to do a job for which it was not designed.

11. WEAR PROPER APPAREL. No loose clothing, gloves, neckties, rings, bracelets, or other jewelry to get caught in moving parts. Nonslip footwear is recommended. Wear protective hair covering to contain long hair.

12. ALWAYS USE SAFETY GLASSES. Wear safety glasses. Everyday eyeglasses only have impact resistant lenses; they are not safety glasses. Also use face or dust mask if cutting operation is dusty.

13. SECURE WORK. Use clamps or a vise to hold work when practical. It's safer than using your hand and frees both hands to operate tool.

14. DON'T OVERREACH. Keep proper footing and balance at all times.

15. MAINTAIN TOOLS IN TOP CONDITION. Keep tools sharp and clean for best and safest performance. Follow instructions for lubricating and changing accessories.

16. DISCONNECT TOOLS before servicing and when changing accessories such as blades, bits, cutters, etc.

17. USE RECOMMENDED ACCESSORIES. The use of accessories and attachments not recommended by Delta may cause hazards or risk of injury to persons.

18. REDUCE THE RISK OF UNINTENTIONAL STARTING. Make sure switch is in OFF position before plugging in power cord.

19. NEVER STAND ON TOOL. Serious injury could occur if the tool is tipped or if the cutting tool is accidentally contacted.

20. CHECK DAMAGED PARTS. Before further use of the tool, a guard or other part that is damaged should be carefully checked to ensure that it will operate properly and perform its intended function – check for alignment of moving parts, binding of moving parts, breakage of parts, mounting, and any other conditions that may affect its operation. A guard or other part that is damaged should be properly repaired or replaced.

21. DIRECTION OF FEED. Feed work into a blade or cutter against the direction of rotation of the blade or cutter only.

22. NEVER LEAVE TOOL RUNNING UNATTENDED. TURN POWER OFF. Don't leave tool until it comes to a complete stop.

23. DRUGS, ALCOHOL, MEDICATION. Do not operate tool while under the influence of drugs, alcohol or any medication.

24. MAKE SURE TOOL IS DISCONNECTED FROM POWER SUPPLY while motor is being mounted, connected or reconnected.

25. WARNING: The dust generated by certain woods and wood products can be injurious to your health. Always operate machinery in well ventilated areas and provide for proper dust removal. Use wood dust collection systems whenever possible.

ADDITIONAL SAFETY RULES FOR JOINTERS

1. WARNING: Do not operate the jointer until it is completely assembled and installed according to the instructions.

2. IF YOU ARE NOT thoroughly familiar with the operation of jointers, obtain advice from your supervisor, instructor or other qualified person.

3. KEEP cutterhead sharp and free of all rust and pitch.

4. BEFORE starting machine, check cutterhead guard to make sure it is not damaged and operates freely.

5. ALWAYS make sure exposed cutterhead behind the fence is guarded, especially when jointing near the edge.

6. NEVER perform jointing or planing operations with the cutterhead guard removed.

7. MAKE CERTAIN the infeed and outfeed tables are tightened before starting the machine.

8. NEVER start the jointer with the workpiece contacting the cutterhead.

9. ALWAYS hold the workpiece firmly against the tables and fence.

10. NEVER perform any operation Free-hand which means using your hands to support or guide the workpiece. ALWAYS use the fence to position and guide the work.

11. AVOID awkward operations and hand positions where a sudden slip could cause your hand to move into the cutterhead.

12. ALWAYS use hold-down/push blocks for jointing material less than 3 inches in height or planing material thinner than 3 inches.

13. DO NOT perform jointing operations on material shorter than 10 inches, narrower than 3/4 inch or less than 1/2 inch thick.

14. DO NOT perform planing operations on material shorter than 10 inches, narrower than 3/4 inch, wider than 6 inches or less than 1/2 inch thick.

15. NEVER make jointing or planing cuts deeper than 1/8 inch. On cuts more than 1-1/2 inches wide, adjust depth of cut to 1/16 inch or less to avoid overloading machine and to minimize chance of kick-back (work thrown back toward you).

16. MAINTAIN the proper relationship of infeed and outfeed table surfaces and cutterhead knife path.

17. SUPPORT the workpiece adequately at all times during operation; maintain control of the work at all times.

18. DO NOT back the workpiece toward the infeed table.

19. DO NOT attempt to perform an abnormal or little-used operation without study and the use of adequate hold-down/push blocks, jigs, fixtures, stops, push blocks, etc.

20. SHUT OFF power before servicing or adjusting jointer.

21. DISCONNECT jointer from power source and clean the machine before leaving it.

22. MAKE SURE the work area is clean before leaving the machine.

23. SHOULD any part of your jointer be missing, damaged, or fail in any way, or any electrical component fail to perform properly, shut off switch and remove plug from power supply outlet. Replace missing, damaged or failed parts before resuming operation.

24. THE USE of attachments and accessories not recommended by Delta may result in the risk of injuiries.

25. ADDITIONAL INFORMATION regarding the safe and proper operation of this product is available from the National Safety Council, 1121 Spring Lake Drive, Itasca, IL 60143-3201 in the Accident Prevention Manual for Industrial Operation and also in the Safety Data Sheets provided by the NSC. Please also refer to the American National Standatd Institute ANSI 01.1 Safety Requirements for Woodworking Machinery and the U.S. Department of Labor OSHA 1910.213 Regulations.

26. SAVE THESE INSTRUCTIONS. Refer to them often and use them to instruct others.

DEFINITIONS OF JOINTING AND PLANING OPERATIONS

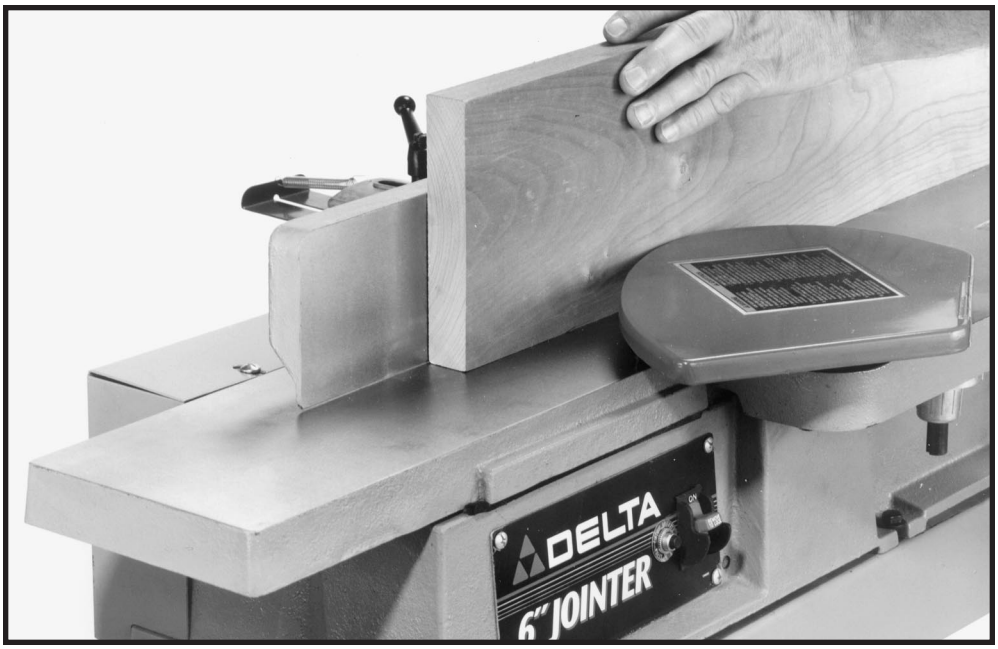

Fig. 2

Jointing Operations - Jointing cuts or edge jointing is the simplest and most common operation which can be done on the jointer and these cuts are made to square an edge of a workpiece. The fence is square with the table and the depth of cut is approximately 1/8 inch. The workpiece is positioned on the jointer with the narrow edge of the workpiece on the infeed table and the major flat surface of the workpiece against the fence, as shown in Fig. 2. The workpiece is moved from the infeed table, across the cutterhead to the outfeed table. The hand over the outfeed table presses the work down so that the newly-formed surface will make perfect contact with the table. The hand over the infeed table (usually the right hand) exerts no downward pressure, but simply advances the work to the cutterhead. Both hands exert pressure to keep the work in contact with the fence.

Fig. 3

Planing Operations - Planing or surfacing are identical to the jointing operation except for the position of the workpiece. For planing, the major flat surface of the workpiece is placed on the infeed table of the jointer with the narrow edge of the workpiece against the fence, as shown in Fig. 3. The workpiece is moved from the infeed table, across the cutterhead to the outfeed table establishing a flat surface on the workpiece. Always use push blocks when performing planing operations.

UNPACKING AND CLEANING

The 6 Motorized Jointer is shipped complete in one container. Carefully unpack the jointer, stand, and all loose items from the container. Figs. 4 and 5 illustrate the items supplied with the jointer.

1. WARNING: For your own safety, DO NOT connect the jointer to a power source until the machine is completely assembled and you have read and understood the entire owner s manual.

2. IMPORTANT: When removing the jointer from the shipping container, DO NOT place the jointer on a flat surface. Support the jointer at both ends with 4 x 4 lumber or similar material, as shown in Fig. 4. This will prevent any damage to the motor assembly, which is located on the base of the jointer.

3. CAUTION: Carefully remove the protective coating from the machined surfaces of the jointer. DO NOT let your hands or fingers come in contact with the cutterhead knives as they are extremely sharp. DO NOT use acetone, gasoline or lacquer thinner to clean the jointer; use a soft cloth moistened with kerosene. After cleaning, cover the table surface with a good quality paste wax.

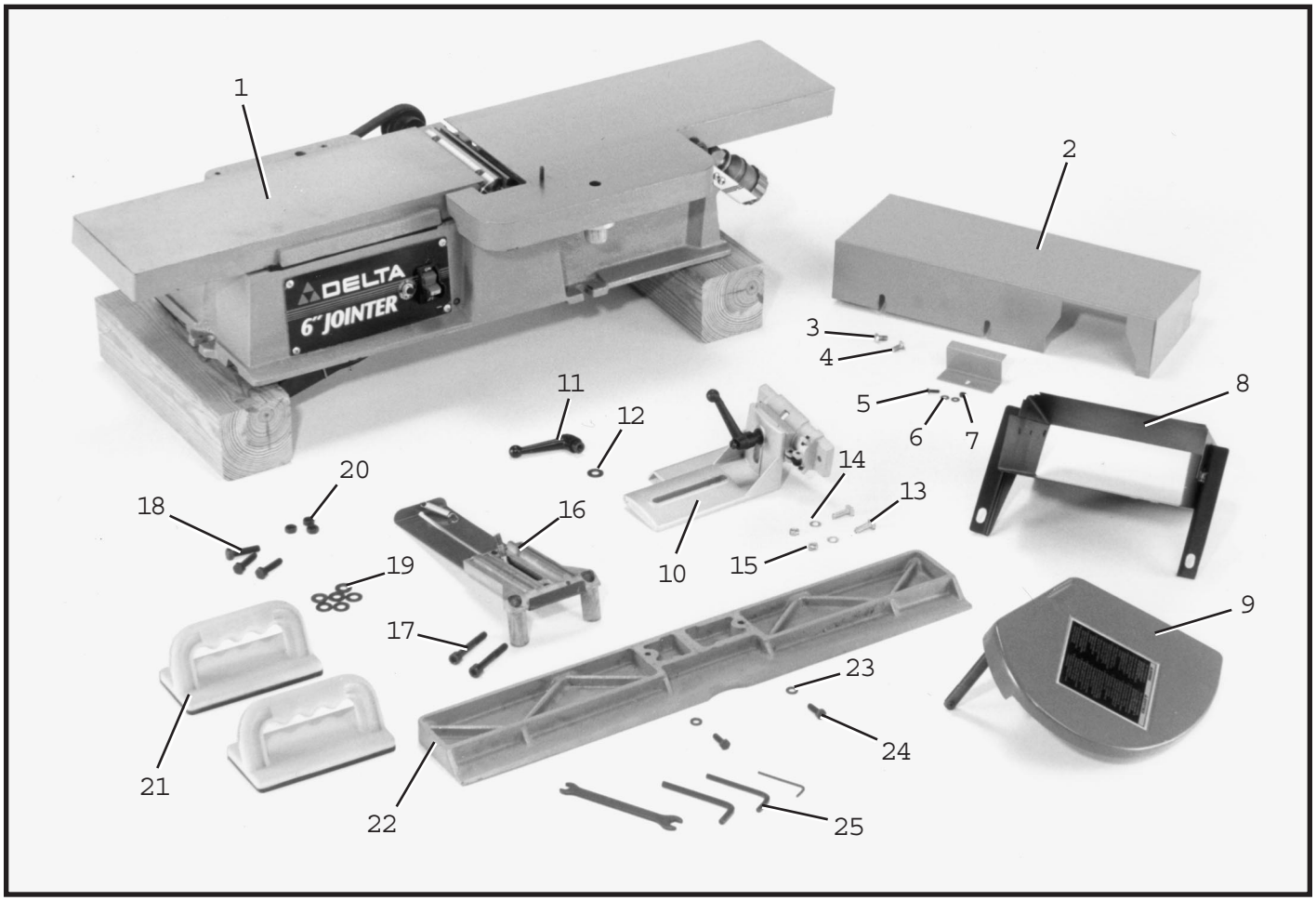

Fig. 4

1. Jointer
2. Belt and Pulley Guard
3. 1/4-20 x 1/2 Truss Head Screw (2)
4. Guard
5. #8-32 x 1/4 Round Head Screw
6. Flat Washers (2)
7. #8-32 Hex Nut
8. Dust Chute
9. Cutterhead Guard
10. Fence Mounting Bracket Assembly
11. Locking Lever
12. Flat Washer
13. 1/4-20 x 3/4 Flat Head Screws (2)
14. Flat Washers (2)
15. 1-1/4-20 Hex Nuts (2)
16. Fence Support Bracket
17. Cap Screws (2)
18. 5/16-18 x 1-1/4 Hex Head Screws (3)
19. Flat Washers (6)
20. 5/16 Hex Nuts (3)
21. Push Blocks (2)
22. Fence
23. Flat Washers (2)
24. 1/4-20 x 3/4 Square Head Screws
25. Wrenches (4): 2.5, 5, 6mm and 8/10mm Open-end

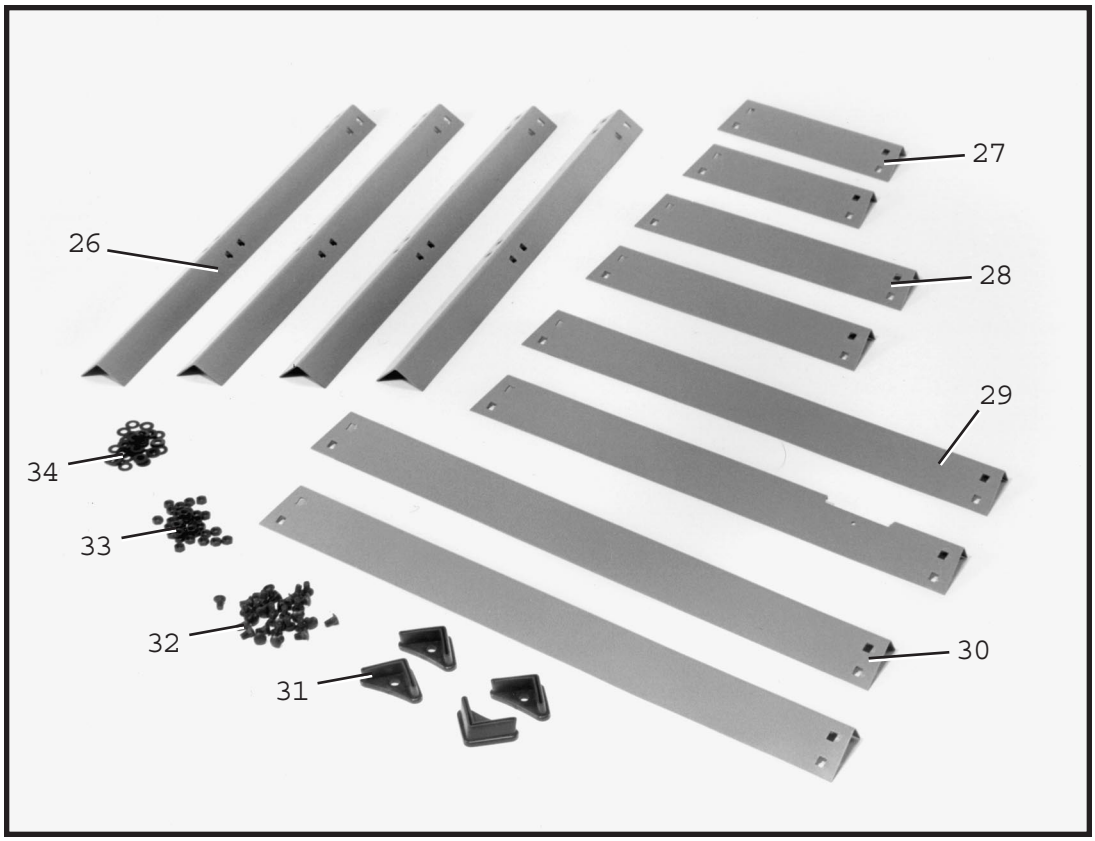

Fig. 5

26. Legs for Stand (4)
27. Two Top End Braces for Stand (10-1/2 long)
28. Two Bottom End Braces for Stand (15-1/2 long)
29. Top Front and Rear Braces for Stand (25-1/2 long)
30. Bottom Front and Rear Braces for Stand (30-1/2 long)
31. Four Feet for Stand Legs
32. 1/2 Long Carriage Bolts for Stand (32)
33. Flat Washers for Stand (32)
34. Hex Nuts for Stand (32)

ASSEMBLY INSTRUCTIONS

WARNING: FOR YOUR OWN SAFETY, DO NOT CONNECT THE JOINTER TO THE POWER SOURCE UNTIL THE JOINTER IS COMPLETELY ASSEMBLED AND YOU HAVE READ AND UNDERSTOOD THE ENTIRE OWNERS MANUAL.

ASSEMBLING STAND

MAKE CERTAIN THE MACHINE IS DISCONNECTED FROM THE POWER SOURCE AND THAT KNIFE GUARD (A) FIG. 13, IS POSITIONED OVER THE CUTTERHEAD.

1. Assemble two top end braces (A) Fig. 6, two top braces (B) and (C), two lower end braces (D), and two lower side braces (E) to the four legs (F) as shown using thirty-two 1/2 long carriage bolts, flat washers, and hex nuts. Only tighten hex nuts fingertight at this time. IMPORTANT: The top lips of the two upper end braces (A) must fit on top of two upper side braces (B) and (C). NOTE: The one top brace (B) with the slotted edge will be at the rear of the jointer when it is assembled.

2. Assemble the four rubber feet (G) Fig. 6, to the bottom of each leg.

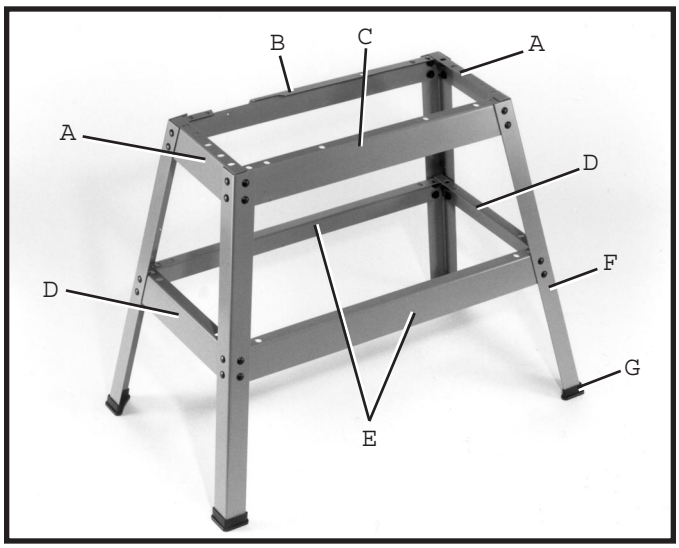

Fig. 6

ASSEMBLING STAND AND DUST CHUTE TO JOINTER

MAKE CERTAIN THE MACHINE IS DISCONNECTED FROM THE POWER SOURCE AND THAT KNIFE GUARD (A) FIG. 13, IS POSITIONED OVER THE CUTTERHEAD.

1. Carefully turn the jointer (A) Fig. 7, upside-down so the table is resting on a supporting surface similar to the two pieces of 4 x 4 lumber as shown. This will facilitate the assembly of the dust chute (B) Fig. 8, and stand (C) to the jointer.

2. Align the three mounting holes (D) Fig. 8, in the stand with three mounting holes in the base of the jointer as shown in Fig. 8.

3. Position dust chute (B) Fig. 9, as shown, over two of the holes (D) that were aligned in STEP 2.

4. Assemble the dust chute (B) and stand (C) Fig. 9, at each hole (D) with a 5/16-18 x 1-1/4 long hex head screw (E), two flat washers (F), and hex nut (G). NOTE: Screws are to be installed upward from the base of the jointer.

5. Carefully turn the jointer with stand and dust chute attached so the jointer is resting on the stand. IMPORTANT: We strongly suggest that two people perform this operation.

6. Apply downward pressure on the jointer so the legs of the stand are adjusted to the floor surface and tighten all stand mounting hardware.

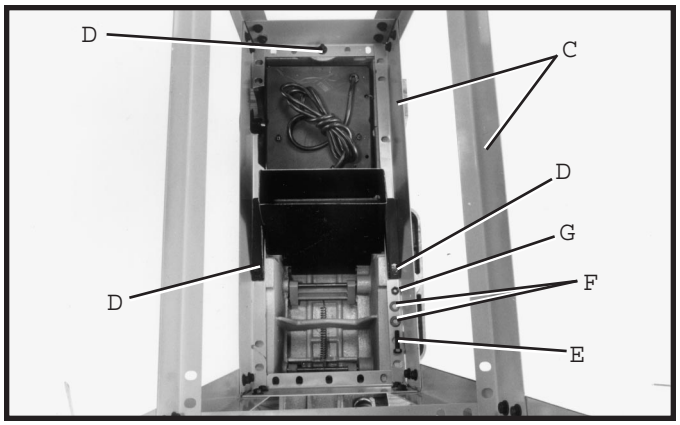

Fig. 9

ASSEMBLING BELT AND PULLEY GUARD

MAKE CERTAIN THE MACHINE IS DISCONNECTED FROM THE POWER SOURCE AND THAT KNIFE GUARD (A) FIG. 13, IS POSITIONED OVER THE CUTTERHEAD.

1. Loosely thread two 1-1/4-20 x 1/2 truss head screws (A) Fig. 10, into the two tapped holes at the rear of the jointer table.

2. Insert slots in guard (B) under heads of screws (A) as shown in Fig. 11, and tighten screws to hold guard in position.

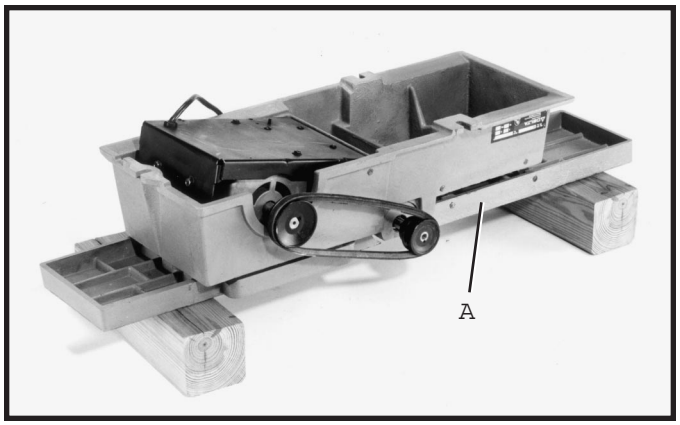

Fig. 7

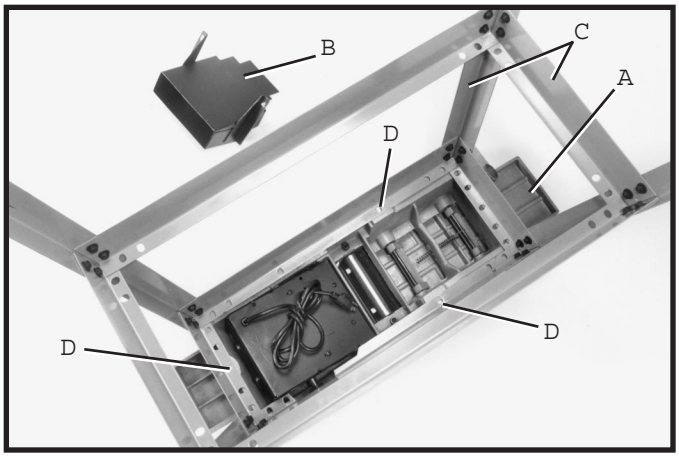

Fig. 8

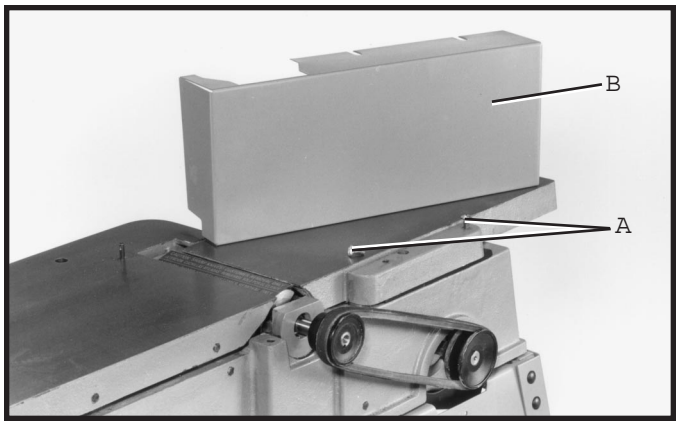

Fig. 10

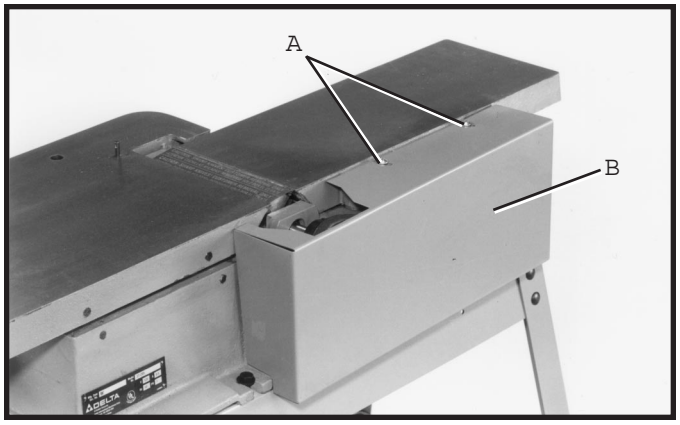

Fig. 11

ASSEMBLING MOTOR PULLEY GUARD

MAKE CERTAIN THE MACHINE IS DISCONNECTED FROM THE POWER SOURCE AND THAT KNIFE GUARD (A) FIG. 13, IS POSITIONED OVER THE CUTTERHEAD.

1. Assemble motor pulley guard (C) Fig. 12, so it fits around the outside of the belt and pulley guard (B). Fasten the motor pulley guard (C) Fig. 12, to the side of the stand with #8-32 x 1/4 round head screw (D), two flat washers, and hex nut.

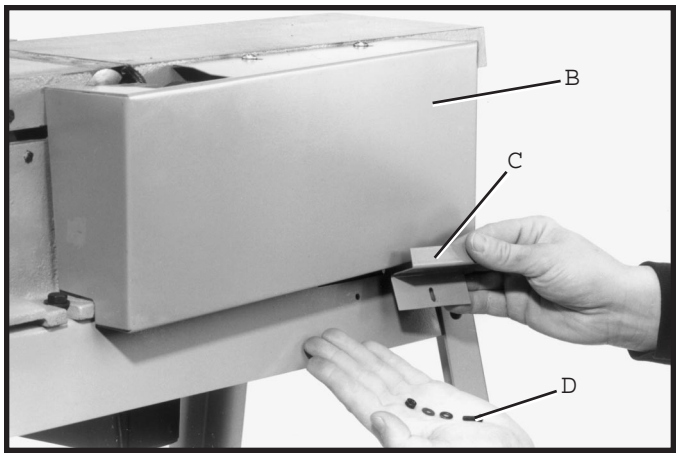

Fig. 12

ASSEMBLING FENCE ASSEMBLY TO JOINTER

MAKE CERTAIN THE MACHINE IS DISCONNECTED FROM THE POWER SOURCE AND THAT KNIFE GUARD (A) FIG. 13, IS POSITIONED OVER THE CUTTERHEAD.

1. Position fence slide bracket (B) Fig. 13, over the two threaded holes (C) at the rear of the jointer and fasten the support bracket with two cap screws (D) and supplied wrench (E).

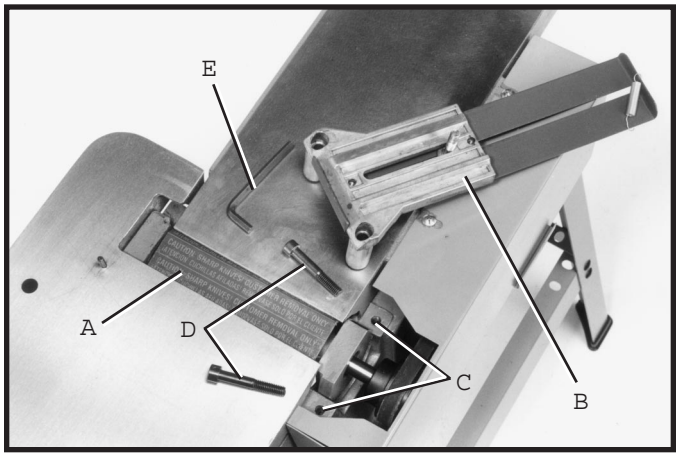

Fig. 13

2. Place fence support bracket (F) Fig. 14, over rod in slide bracket assembly (B) and fasten with flat washer and locking lever (G).

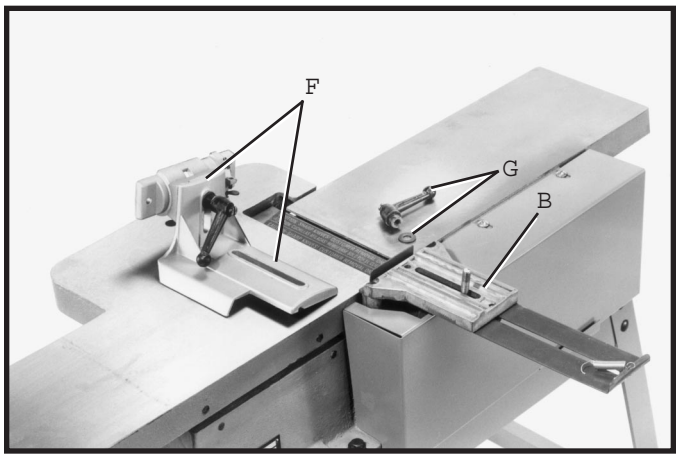

Fig. 14

3. Fig. 15, illustrates the slide and support brackets assembled to the jointer.

4. Align the two holes in the fence support bracket (H) Fig. 15, with two holes (J) in fence (K) and carefully fasten the fence to the fence support bracket with two flat washers and 1/4-20 x 3/4 square head screws (L) as shown in Fig. 16.

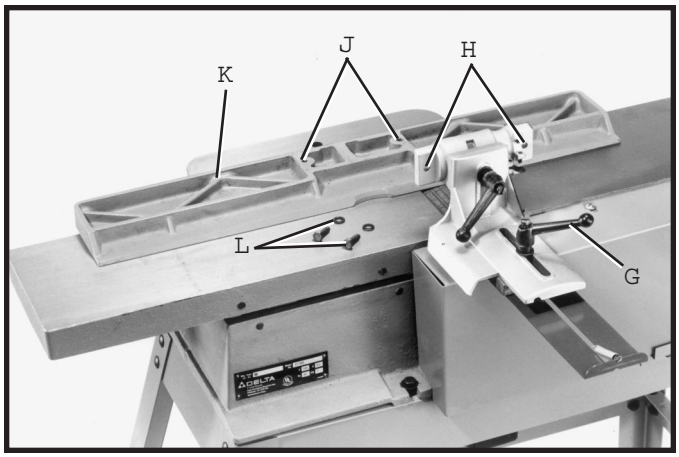

Fig. 15

5. Assemble the free end of spring (M) Fig. 16, onto the rear edge of bracket (F). NOTE: The tension on spring (M) Fig. 16, automatically allows safety guard (N) to move forward with the fence (K) and over the rear of the cutterhead for operator safety.

6. IMPORTANT: REMOVE KNIFE GUARD FROM CUTTERHEAD ASSEMBLY.

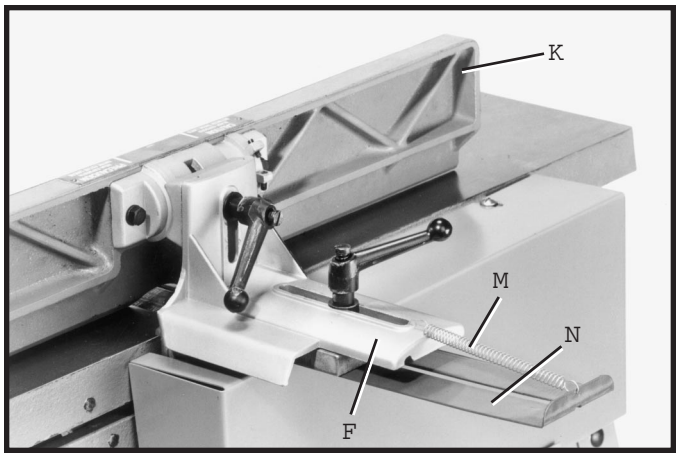

Fig. 16

ASSEMBLING CUTTERHEAD GUARD

MAKE CERTAIN THE MACHINE IS DISCONNECTED FROM THE POWER SOURCE AND THAT KNIFE GUARD IS POSITIONED OVER THE CUTTERHEAD.

1. Remove set screw (A) Fig. 17, from the post of the cutterhead guard (B) with supplied wrench (C).

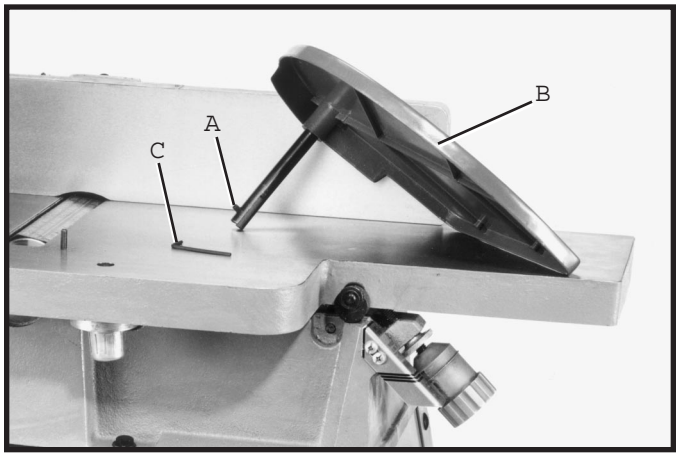

Fig. 17

2. Insert the post of cutterhead guard (B) Fig. 18, down through hole (D) in the infeed table. NOTE: A spring is supplied inside knob assembly (E) Fig. 18, that returns guard (B) over the cutterhead after the cut has been made. Turn knob (E) Fig. 18, to provide tension on the spring before inserting the post. Make certain the spring inside knob (E) engages slot in cutterhead post and that the guard (B) is positioned over pin (F). If spring tension is too much or too little, adjust the tension spring accordingly by removing the guard and rotating knob (E).

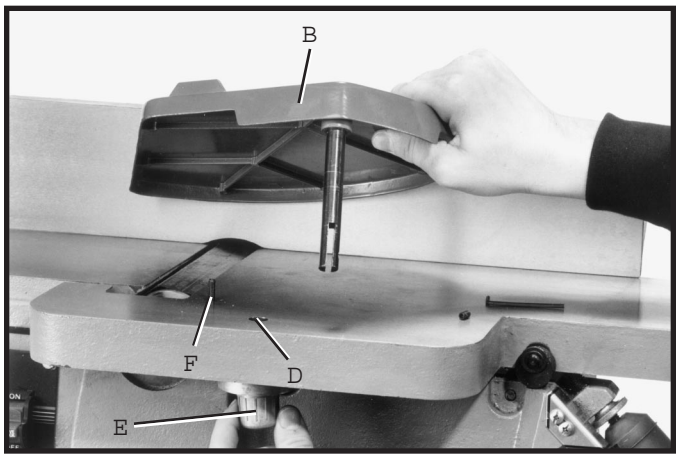

Fig. 18

3. Thread set screw (A) Fig. 19, which was removed in STEP 1, back into post to keep cutterhead guard (B) in position during jointer operation.

4. Fig. 19, illustrates the cutterhead guard (B) assembled to the infeed table. NOTE: When installed correctly, the guard should spring back over the cutterhead after the cut.

Fig. 19

EXTENSION CORDS

Use proper extension cords. Make sure your extension cord is in good condition and is a 3-wire extension cord which has a 3-prong grounding type plug and a 3-pole receptacle which will accept the tool s plug. When using an extension cord, be sure to use one heavy enough to carry the current of the jointer. An undersized cord will cause a drop in line voltage, resulting in loss of power and overheating. Fig. 20 shows the correct gage to use depending on cord length. If in doubt, use the next heavier gage. The smaller the gage number, the heavier the cord.

TOTAL LENGTH OF CORD IN FEET	GAGE OF EXTENSION CORD TO USE
0 - 25	16 AWG
26 - 50	16 AWG
51 - 100	14 AWG
101 - 150	12 AWG

Fig. 20

CONNECTING JOINTER TO POWER SOURCE

POWER CONNECTIONS

A separate electrical circuit should be used for your tools. This circuit should not be less than #12 wire and should be protected with a 20 Amp fuse. Have a certified electrician replace or repair a worn cord immediately. Before connecting the motor to a power line, make sure the switch is in the OFF position and be sure that the electric current is of the same characteristics as stamped on the motor nameplate. Running on low voltage will damage the motor.

WARNING: DO NOT EXPOSE THE TOOL TO RAIN OR OPERATE THE TOOL IN DAMP LOCATIONS.

GROUNDING INSTRUCTIONS

In the event of a malfunction or breakdown, grounding provides a path of least resistance for electric current to reduce the risk of electric shock. The motor is equipped with an electric cord having an equipment-grounding conductor and a grounding plug. The plug must be plugged into a matching outlet that is properly installed and grounded in accordance with all local codes and ordinances.

Do not modify the plug provided - if it will not fit the outlet, have the proper outlet installed by a qualified electrician.

Improper connection of the equipment-grounding conductor can result in risk of electric shock. The conductor with insulation having an outer surface that is green with or without yellow stripes is the equipment-grounding conductor. If repair or replacement of the electric cord or plug is necessary, do not connect the equipment grounding conductor to a live terminal. Check with a qualified electrician or service personnel if the grounding instructions are not completely understood, or if in doubt as to whether the tool is properly grounded.

Use only 3-wire extension cords that have 3-prong grounding type plugs and 3-hole receptacles that accept the tool s plug, as shown in Fig. 21.

Repair or replace damaged or worn cord immediately.

This tool is intended for use on a circuit that has an outlet and a plug that looks like the one shown in Fig. 21. A temporary adapter, which looks like the adapter illustrated in Fig. 22, may be used to connect this plug to a 2-pole receptacle, as shown in Fig. 22, if a properly grounded outlet is not available. The temporary adapter should be used only until a propery grounded outlet can installed by a qualified electrician. THIS ADAPTER IS NOT APPLICABLE IN CANADA. The green-colored rigid ear, lug, and the like, extending from the adapter, must be connected to a permanent ground, such as a properly grounded outlet box, as shown in Fig. 22.

CAUTION: IN ALL CASES, MAKE CERTAIN THE RECEPTACLE IN QUESTION IS PROPERLY GROUNDED. IF YOU ARE NOT SURE, HAVE A CERTIFIED ELECTRICIAN CHECK THE RECEPTACLE.

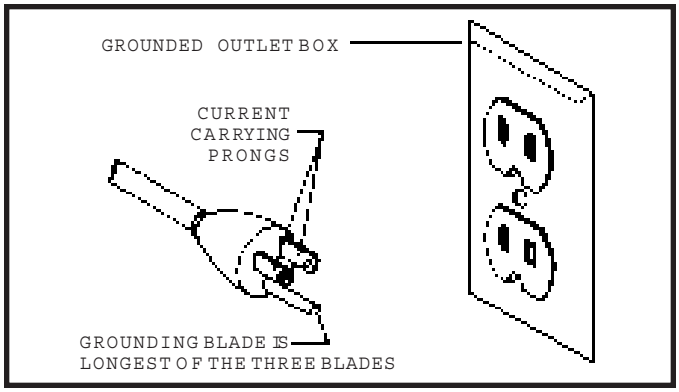

Fig. 21

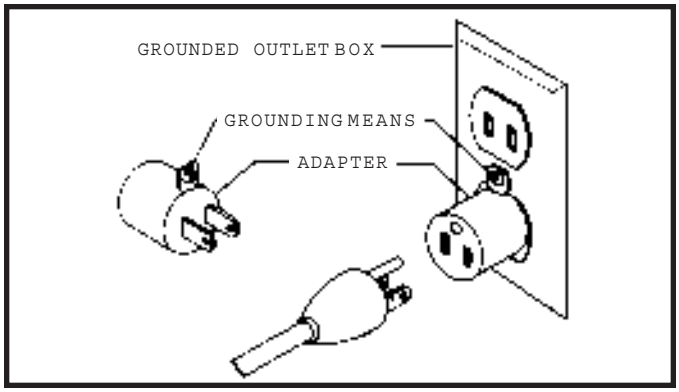

Fig. 22

OPERATING CONTROLS AND ADJUSTMENTS

ON/OFF SWITCH

The on/off switch (A) Fig. 23, is located at the front left side of the jointer. To give power to the jointer, move the switch (A) to the UP position. To turn the power OFF, move the switch (A) to the down position.

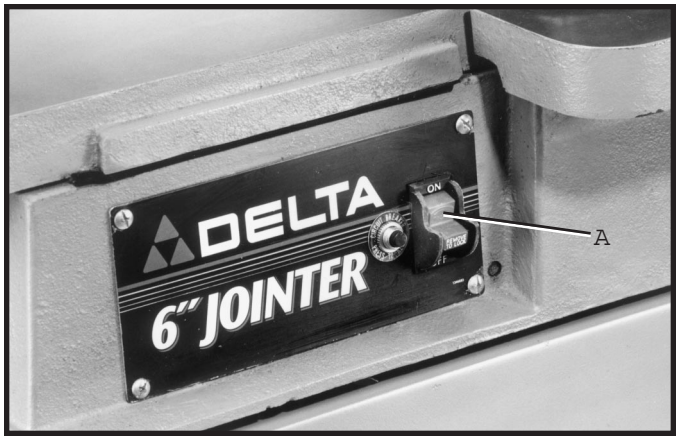

Fig. 23

LOCKING SWITCH IN THE OFF POSITION

We suggest when the jointer is not in use, that the switch be locked in the OFF position for safety and to prevent unwarranted use. This can be done by pulling the switch toggle (B) outward as shown in Fig. 24. With the switch toggle (B) removed, the switch (A) will not operate. However, should the toggle switch (B) be removed while the jointer is running, it can be turned off, but cannot be restarted again without inserting the switch toggle (B).

Fig. 24

OVERLOAD PROTECTION

The jointer is equipped with a reset overload relay button (C) Fig. 24. If the motor shuts off or fails to start due to overloading (jointing too deep; working with dull knives; using the jointer beyond its capacity), move the power switch to the off position. Let the motor cool three to five minutes, then push the reset button (C) to reset the overload device. The motor can then be turned on again in the usual manner.

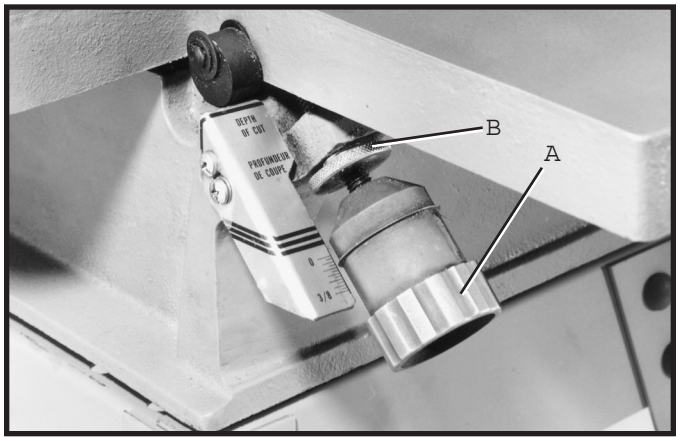

Fig. 25

KNIFE AND TABLE ADJUSTMENTS

In order to do accurate work, the knives must be exactly level with the outfeed table. To check and adjust if necessary, proceed as follows:

1. MAKE CERTAIN THE MACHINE IS DISCONNECTED FROM THE POWER SOURCE.

2. Loosen locking knob (B) Fig. 25, and lower the infeed table by turning the adjustment knob (A) counterclockwise and swing the cutterhead guard out of the way.

3. Place a steel straight edge on the outfeed table extending out over the cutterhead, as shown in Fig. 26.

4. Carefully rotate the cutterhead by hand. The knives should just touch the straight edge.

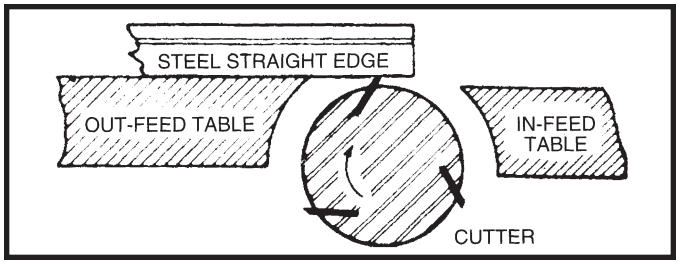

Fig. 26

5. If the knife is high or low at either end, slightly turn four screws (C) Fig. 27, in the knife locking bar clockwise to loosen, using the wrench (D) supplied. Then adjust the height of the knife by turning the knife raising screws (E) Fig. 28, counterclockwise to lower, or clockwise to raise, the knife. NOTE: If the knife must be lowered, it will be necessary to carefully push down on the knife after screws (E) have been turned. IMPORTANT: Tighten knife locking screws (C) after adjustments are made.

6. Repeat these procedures for adjusting the remaining two knives if necessary.

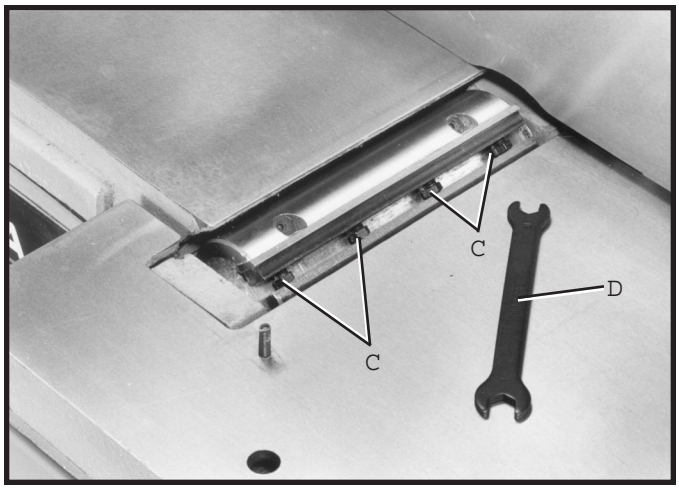

Fig. 27

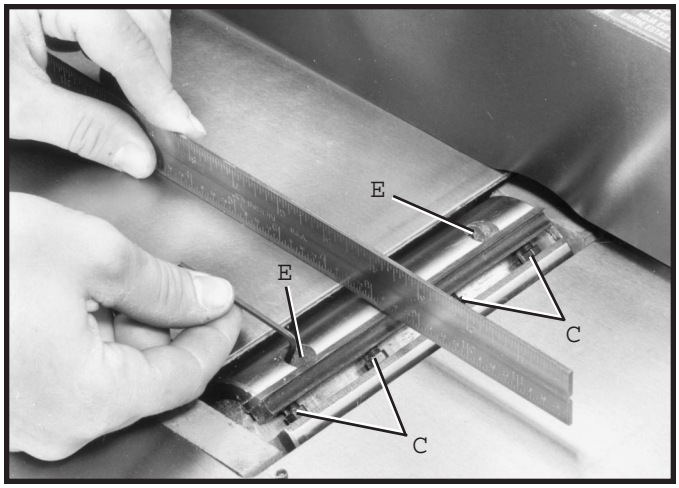

Fig. 28

7. If the knives are set too low, the result will be as shown in Fig. 29, and the surface will be curved.

8. If the knives are set too high, the work will be gouged at the end of the cut, as shown in Fig. 30.

9. As a final check, run a piece of work slowly over the knives for 6 to 8 inches. The wood should rest firmly on both tables, as shown in Fig. 31, with no open spaces under the finished cut.

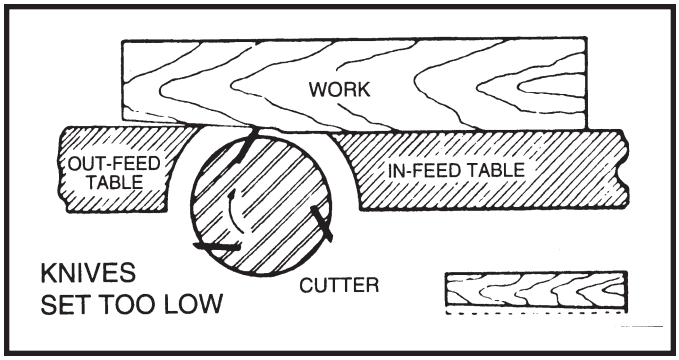

Fig. 29

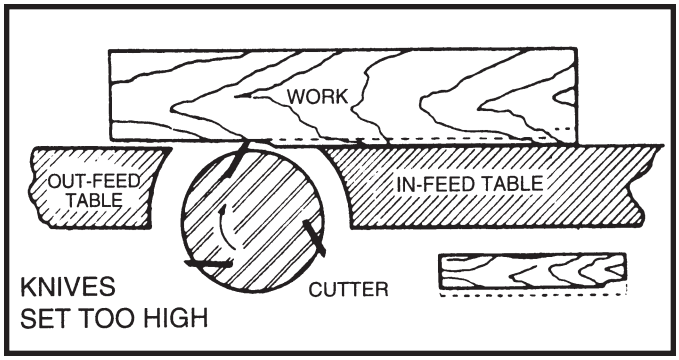

Fig. 30

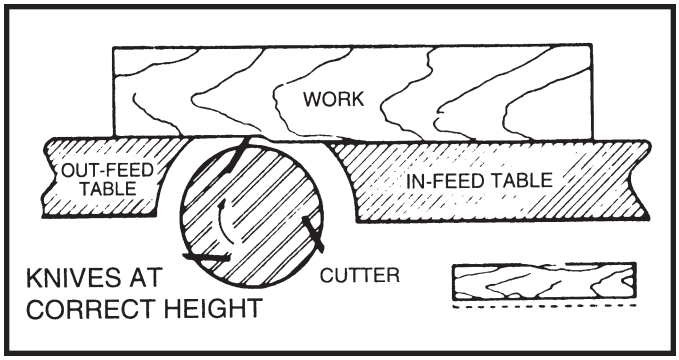

Fig. 31

ADJUSTING DEPTH-OF-CUT

The jointer can be set to cut any depth from a very thin shaving to 3/8 . If a cut deeper than 3/8 is desired, the cut should be made in three or more passes.

1. MAKE CERTAIN THE MACHINE IS DISCONNECTED FROM THE POWER SOURCE.

2. To adjust the depth-of-cut, loosen lock knob (B) Fig. 32. Turn adjustment knob (A) counterclockwise to lower the infeed table or clockwise to raise the infeed table. The ring (C) Fig. 32, indicates the depth-of-cut on scale (D). Tighten lock knob (B), after adjustment is made.

3. To check if the ring (C) Fig. 32, is aligned correctly to the depth-of-cut scale (D), place a straight edge on the outfeed table and extend it over the infeed table as shown in Fig. 33.

4. Loosen locking knob (B) Fig. 34, and raise the infeed table by turning adjustment knob (A) clockwise until the infeed table touches the straight edge. The ring (C) Fig. 34, should line up with zero on the depth-of-cut scale (D).

5. If the ring on the adjustment knob does not line up with zero on the depth-of-cut scale, make the following adjustments:

   [a] Loosen set screw with wrench (E) inside adjustment knob (A) Fig. 34, as shown.

   [b] Turn knob (A) Fig. 34, clockwise or counterclockwise as necessary until the ring (C) lines up with the depth-of-cut scale (D).

   [c] Tighten set screw that was loosened inside adjustment knob in STEP [a].

6. IMPORTANT: The jointer features an automatic table stop (F) Fig. 35, which does not allow the infeed table to be lowered by more than 1/8 increments. This also acts as a safety feature should the operator fail to lock the table after setting the depth-of-cut. If it is ever necessary to lower the infeed table more than 1/8 , the stop (F) must be pushed upward while adjusting the table height.

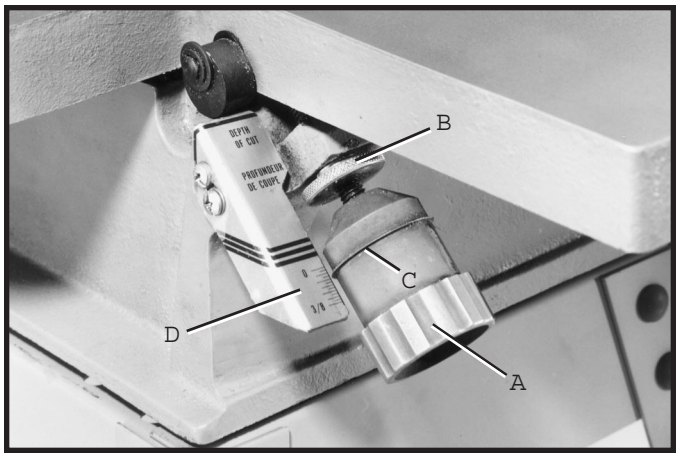

Fig. 32

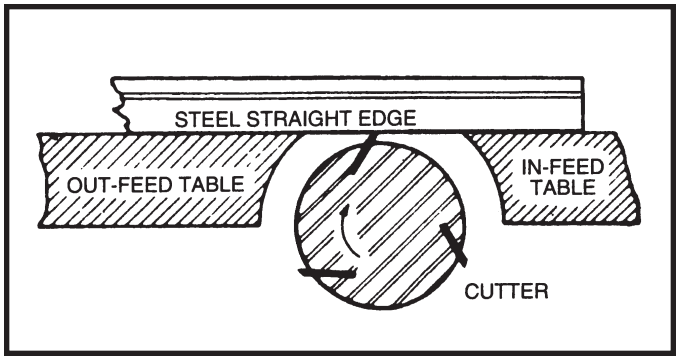

Fig. 33

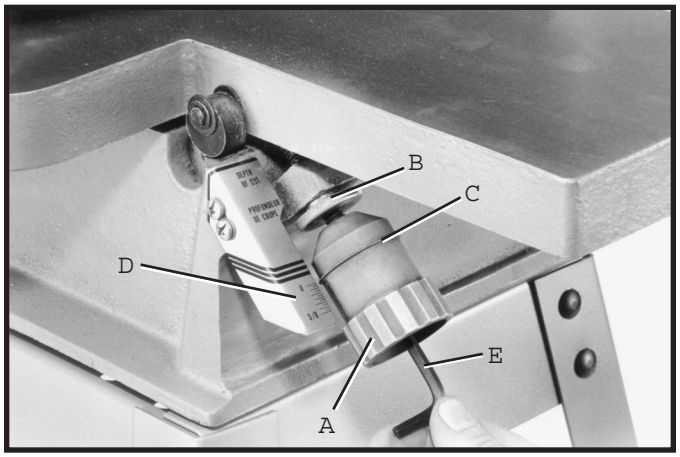

Fig. 34

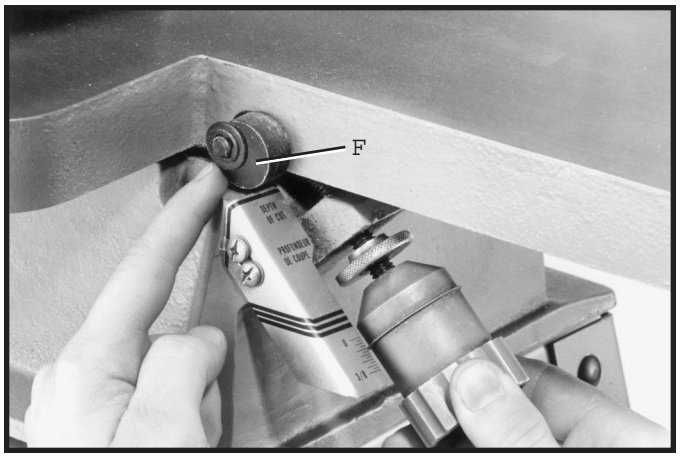

Fig. 35

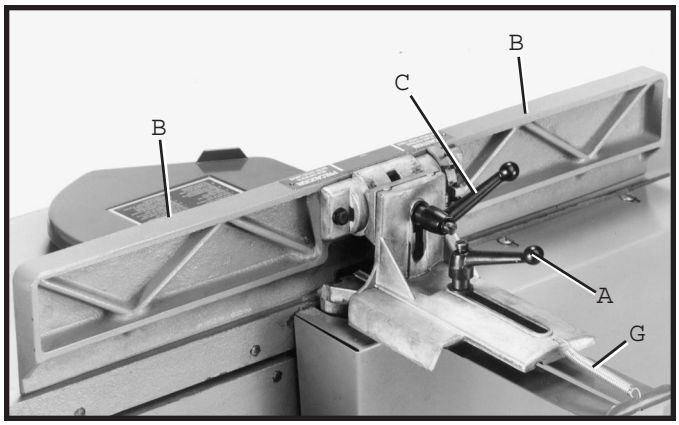

Fig. 36

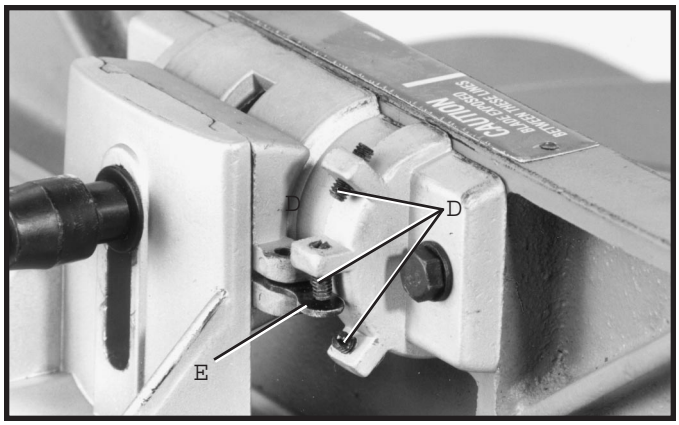

Fig. 37

FENCE ADJUSTMENTS

The fence can be easily moved across the table and can tilt 45 degrees left or right at any position on the table.

1. To move the fence across the table, loosen lever (A) Fig. 36, slide the fence (B) to the desired position and tighten locking lever (A).

2. To tilt the fence (B) Fig. 36, loosen lever (C) and tilt the fence to the desired angle and tighten lever (C). NOTE: Levers (A) and (C) are spring-loaded and can be repositioned by pulling outward on the levers and re-positioning them on the serrated nut located underneath the levers.

3. The fence on the jointer features adjustable positive stops (D) Fig. 37, and a stop link (E) at 90 degrees right and left. Check the fence angle at 90 degrees with a square (F) as shown in Fig. 38. If an adjustment is necessary, turn set screw (D) in or out until it contacts the stop link (E) when the fence is set at 90 degrees to the table.

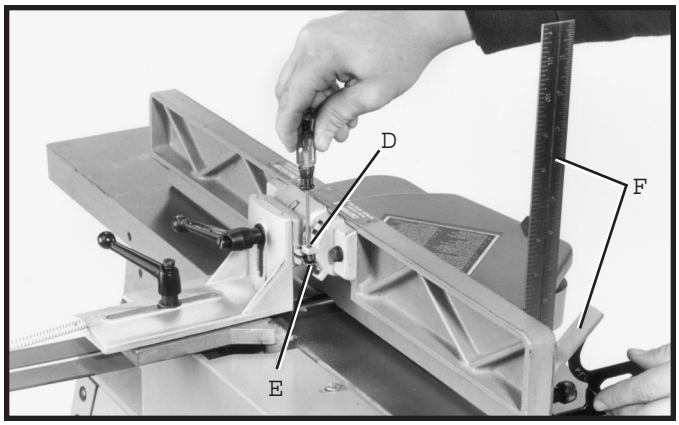

Fig. 38

4. Repeat this procedure to check the positive stops (D) Fig. 37, at 45 degrees right and 45 degrees left

OPERATIONS

The following directions will give the beginner a start on jointer operations. Use scrap pieces of lumber to check settings and to get the feel of the operations before attempting regular work.

WARNING: ALWAYS USE CUTTERHEAD GUARD AND KEEP HANDS AWAY FROM THE CUTTERHEAD.

ALWAYS USE PUSH BLOCKS WHENEVER POSSIBLE.

PLACEMENT OF HANDS DURING FEEDING

At the start of the cut, the left hand holds the work firmly against the infeed table and fence, while the right hand pushes the work toward the knives. After the cut is under-way, the new surface rests firmly on the outfeed table as shown in Fig. 39. The left hand should then be moved to the work on the outfeed table, at the same time main-taining flat contact with the fence. The right hand press-es the work forward, and before the right hand reaches the cutterhead, it should be moved to the work on the outfeed table.

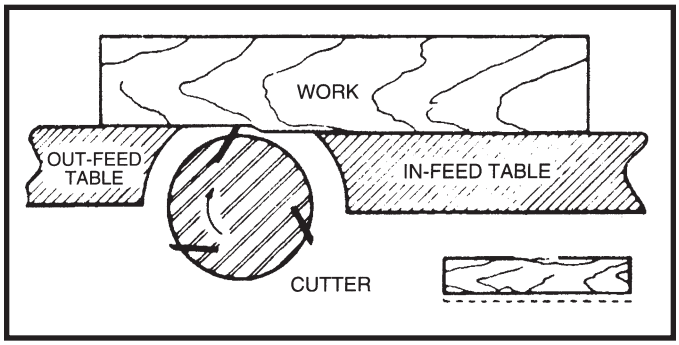

Fig. 39

CAUTION: NEVER PASS HANDS DIRECTLY OVER THE CUTTERHEAD.

JOINTING AN EDGE

This is the most common operation for the jointer. Set the guide fence square with the table. Depth of cut should be the minimum required to obtain a straight edge. Hold the best face of the piece firmly against the fence throughout the feed as shown in Fig. 40.

DO NOT PERFORM JOINTING OPERATIONS ON MATERIAL SHORTER THAN 10 INCHES, NARROWER THAN 3/4 INCH, OR LESS THAN 1/2 INCH THICK (REFER TO FIG. 41).

Fig. 40

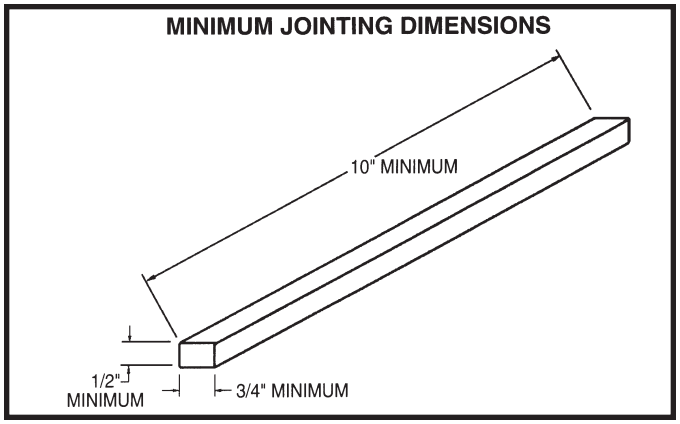

Fig. 41

PLANING OR SURFACING

Planing or surfacing is identical to the jointing operation except for the position of the workpiece. For planing, the major flat surface of the workpiece is placed on the infeed table of the jointer with the narrow edge of the workpiece against the fence, as shown in Fig. 42. The workpiece is moved from the infeed table, across the cutterhead to the outfeed table establishing a flat surface on the workpiece Always use push blocks when performing planing operations and never pass your hands directly over the cutterhead.

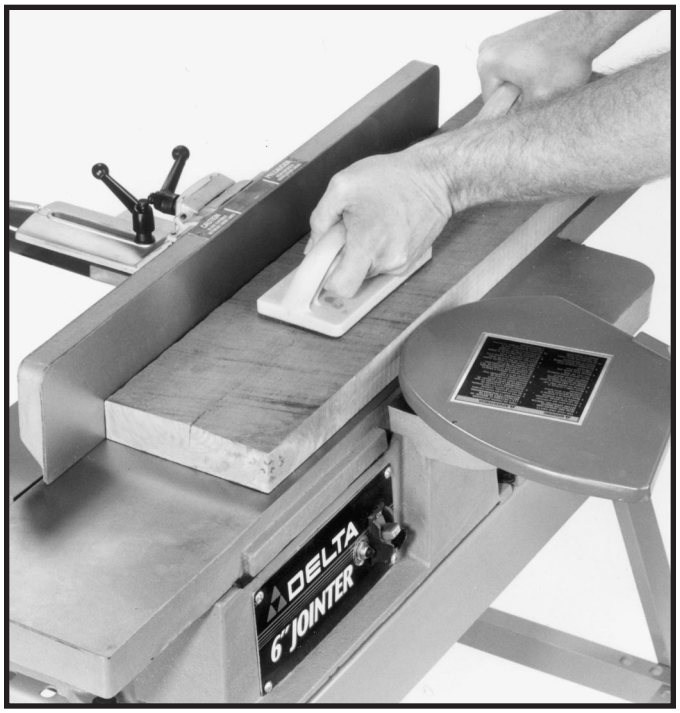

Fig. 42

BEVELING

To cut a bevel, lock the fence at the required angle and run the work across the knives while keeping the work firmly against the fence and tables. Several passes may be necessary to arrive at the desired result. When the angle is small, there is little difference whether the fence is tilted to the right or left. However, at greater angles approaching 45 degrees, it is increasingly difficult to hold the work properly when the fence is tilted to the right. The advantage of the double-tilting fence is appreciated under such conditions.

When tilted to the left, the fence forms a V-shape with the tables, and the work is easily pressed into the pocket while passing it across the knives. If the bevel is laid out on the piece in such direction that this involves cutting against the grain, it will be better to tilt the fence to the right.

Fig. 43, illustrates a slight bevel being cut onto the edge of a workpiece.

Fig. 43

TAPER CUTS

One of the most useful jointer operations is cutting an edge to a taper. The method can be used on a wide variety of work. Tapered legs of furniture are a common example.

Instead of laying the piece on the infeed table, lower the forward end of the work onto the outfeed table. Do this very carefully, as the piece will span the knives, and they will take a bite from the work with a tendency to kick back unless the piece is firmly held. Now push the work forward as in ordinary jointing. The effect is to plane off all the stock in front of the knives, to increasing depth, leaving a tapered surface.

The ridge left by the knives when starting the taper may be removed by taking a very light cut according to the regular method for jointing, with the infeed table raised to its usual position.

Practice is required in this operation, and the beginner is advised to make trial cuts on waste material. Taper cuts over part of the length and a number of other special operations can easily be done by the experienced craftsman.

CUTTING A RABBET

IMPORTANT: DO NOT REMOVE THE CUTTERHEAD GUARD WHEN PERFORMING RABBETING OPERATIONS.

Rabbeting is similar to a jointing operation except that only a partial cut is made in the edge of the work surface, as shown in Fig. 44.

Make certain the machine is disconnected from the power source when adjusting the fence for rabbeting! Adjust the fence to the desired width of the rabbet cut. WARNING: THE UNCUT PORTION OF THE RABBET CANNOT BE GREATER THAN 3/4 .

Hold the work firmly against the fence while making the rabbet cut. NOTE: DO NOT MAKE CUTS GREATER THAN 1/8 IN EACH PASS. IF A DEEPER CUT IS REQUIRED, MAKE SEVERAL CUTS TO A MAXIMUM OF 3/8 FOR THIS JOINTER.

Fig. 44

PLANING WARPED PIECES

If the wood to be planed is dished or warped, take light cuts until the surface is flat. Avoid forcing such material down against the table; excessive pressure will spring it while passing the knives, and it will spring back and remain curved after the cut is completed.

Fig. 45

PLANING SHORT OR THIN WORK

When planing short or thin pieces, always use push blocks to minimize all danger to the hands. Fig. 45, illustrates using the Delta 37-108 Push Blocks properly.

DO NOT PERFORM PLANING OPERATIONS ON MATERIAL SHORTER THAN 10 INCHES, NARROWER THAN 3/4 INCH, WIDER THAN 6 INCHES, OR LESS THAN 1/2 INCH THICK (REFER TO FIG. 46).

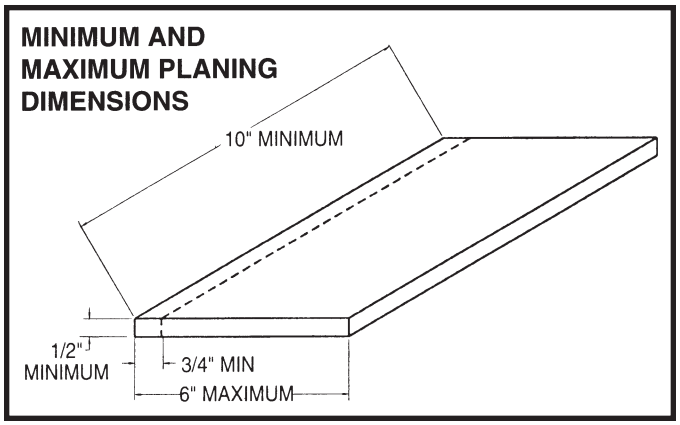

Fig. 46

DIRECTION OF GRAIN

Avoid feeding work into the jointer against the grain as shown in Fig. 47. The result will be chipped and splintered edges. Feed with the grain as shown in Fig. 48, to obtain a smooth surface.

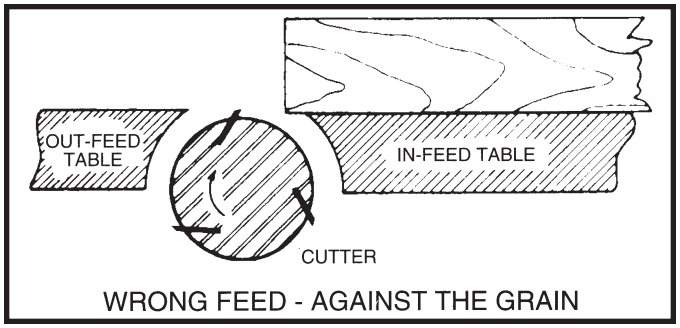

Fig. 47

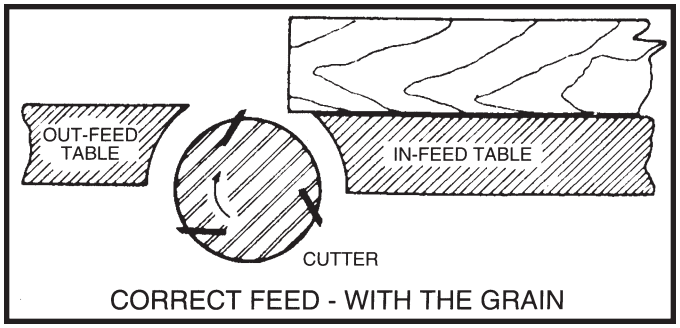

Fig. 48

MAINTENANCE AND REPAIRS

After considerable use, the knives will become dull and it will not be possible to do accurate work. Unless badly damaged by running into metal or other hard material, the knives may be sharpened as follows:

WHETTING KNIVES

DISCONNECT THE MACHINE FROM THE POWER SOURCE. Use a fine carborundum stone, cover it partly with paper as indicated in Fig. 49 to avoid marking the table. Lay the stone on the infeed table, lower the table and turn the cutterhead forward until the stone lies flat on the bevel of the knife as shown. Hold the cutterhead from turning, and whet the bevelled edge of the knife, stroking lengthwise by sliding the stone back and forth across the table. Do the same amount of whetting on each of the three knives.

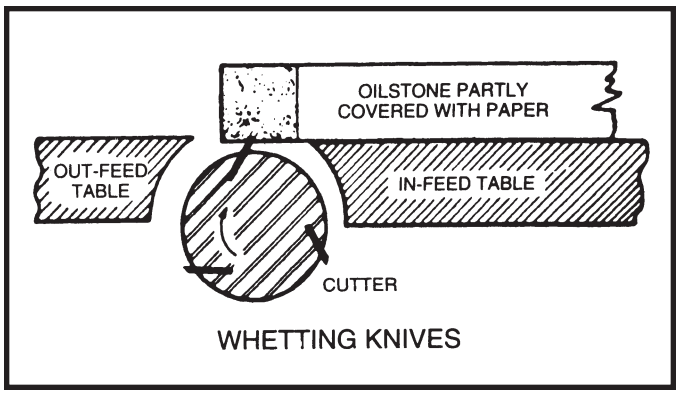

Fig. 49

REMOVING, REPLACING, AND RESETTING KNIVES

If the knives are removed from the cutterhead for replacement or regrinding, care must be used in removing, replacing, and resetting them as follows:

1. DISCONNECT THE MACHINE FROM THE POWER SOURCE.

2. Move the fence to the rear and remove the cutterhead guard. WARNING: BE EXTREMELY CAREFUL THAT YOUR HANDS DO NOT COME IN CONTACT WITH THE KNIVES.

3. Using wrench (A) Fig. 50, slightly loosen the four locking screws (B) in each knife slot by turning the screws (B) clockwise. This relieves stress in the cutterhead.

4. Loosen screws (B) Fig. 50, further and remove knife and knife locking bar.

5. Fig. 51, illustrates the knife (C) and knife locking bar (D) removed from the cutterhead. Remove the remaining two knives and locking bars, in the same manner.

6. Using wrench (E) Fig. 51, lower the two knife adjustment blocks by turning screws (F) counterclockwise in all three slots of the cutterhead.

7. Before replacing knives make certain the knife lockign bars are thoroughly clean and free of gum and pitch.

8. Replace the knife locking bars (D) Fig. 51, and knives (C) into each slot in the cutterhead. WARNING: CARE MUST BE TAKEN WHEN INSERTING THE KNIVES AS THE CUTTING EDGES ARE VERY SHARP. Push the knife down as far as possible and snug up the screws (B) Fig. 50, by turning each screw counterclockwise just enough to hold the knife in position. Replace the remaining two knives in the same manner. NOTE: KNIVES MUST BE INSTALLED CORRECTLY AS SHOWN IN FIG. 52.

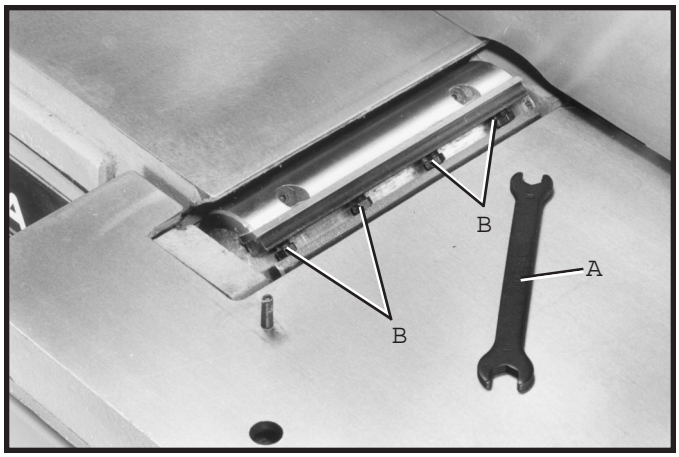

Fig. 50

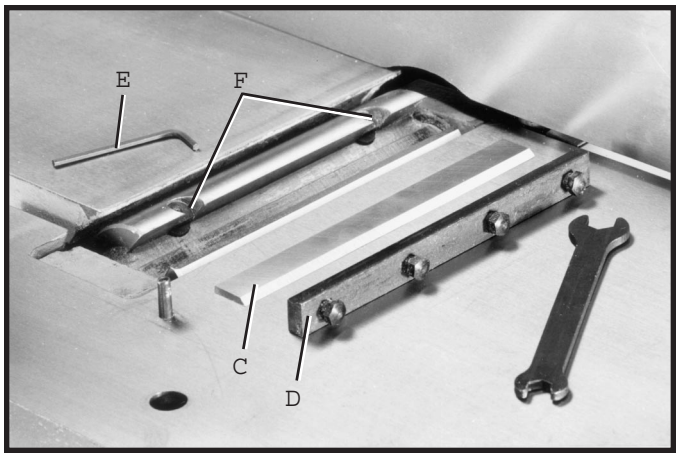

Fig. 51

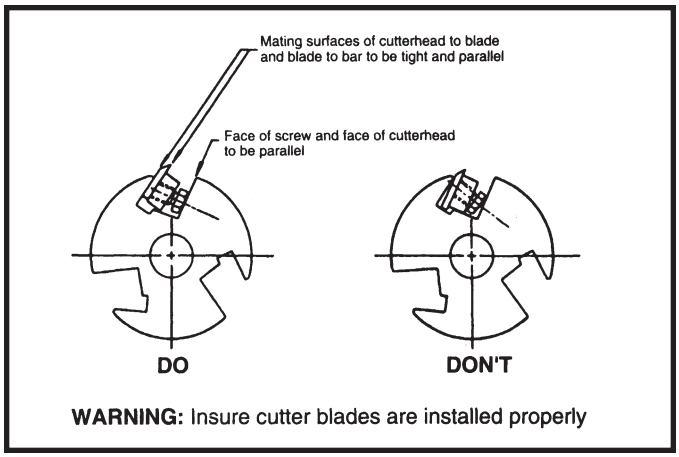

Fig. 52

9. Lower the infeed table and place a straight edge (J) Fig. 53, on the outfeed table extending over the cutterhead as shown.

10. Rotate the cutterhead by hand until the knife is at its highest point at each end of the cutterhead. To raise the knife, use wrench (E) Fig. 53, and turn raising screw clockwise until the knife just touches the straight edge (J) on each end and center of the cutterhead when the knife is at its highest point. When you are certain the knife is adjusted properly, tighten the four locking screws (B) by turning them counterclockwise.

11. Adjust the remaining two knives in the same manner. WARNING: MAKE CERTAIN THAT ALL KNIVES ARE SECURELY FASTENED IN CUTTERHEAD BEFORE TURNING ON POWER.

12. Replace cutterhead guard.

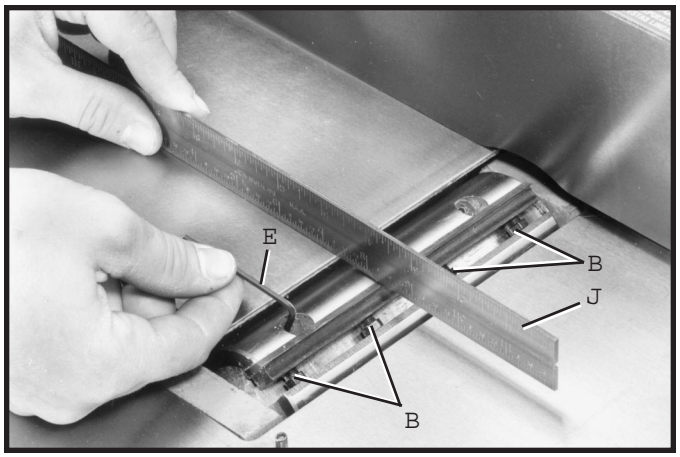

Fig. 53

BLADE CARE

Gum and pitch which collect on the blades causes excessive friction as the work progresses, resulting in blade overheating, less efficient cutting, and reduced blade life. DISCONNECT THE MACHINE FROM THE POWER SOURCE and carefully wipe the blades clean using Gum and Rust Remover.

In time, gum and pitch may appear on the table and fence and other parts of the jointer, resulting in reduced efficiency and accuracy. The use of a good quality paste wax will aid in preventing gum and pitch from accumulating on the machine.

IDENTIFICATION PLATE

The identification plate (A) Fig. 54, is located at the rear of the jointer, as shown. Record the serial number onto the front of this manual for future reference.

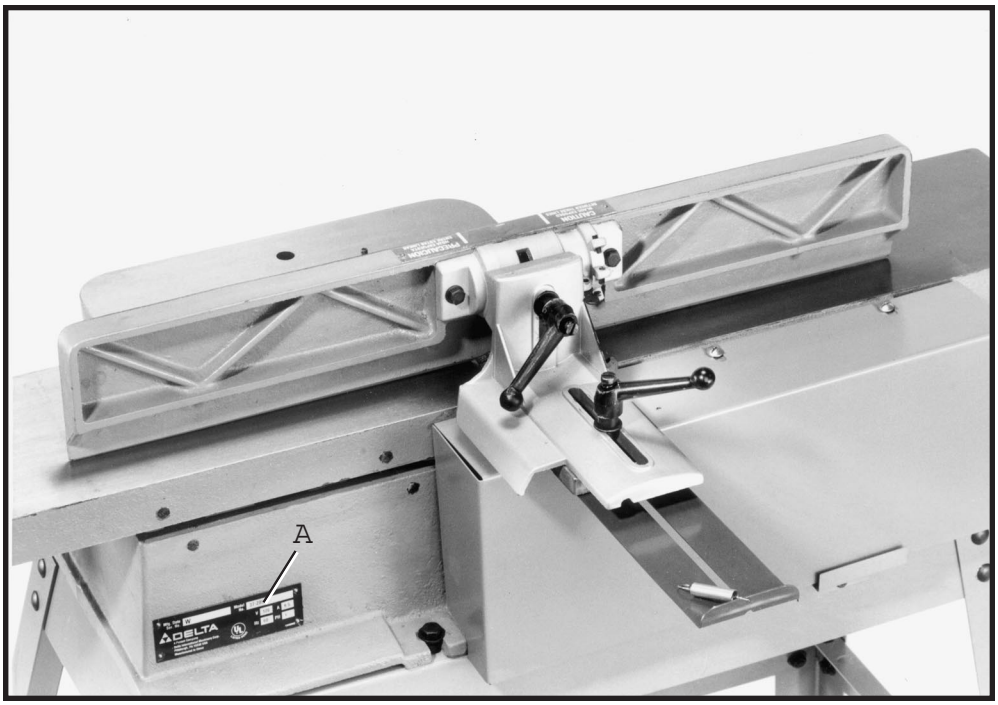

Fig. 54

CONSTRUCTING A PUSH STICK

Narrow pieces of stock that are close to 10 inch minimum length should be handled with a push stick and push block. Fig. 55, is a pattern for a push stick.

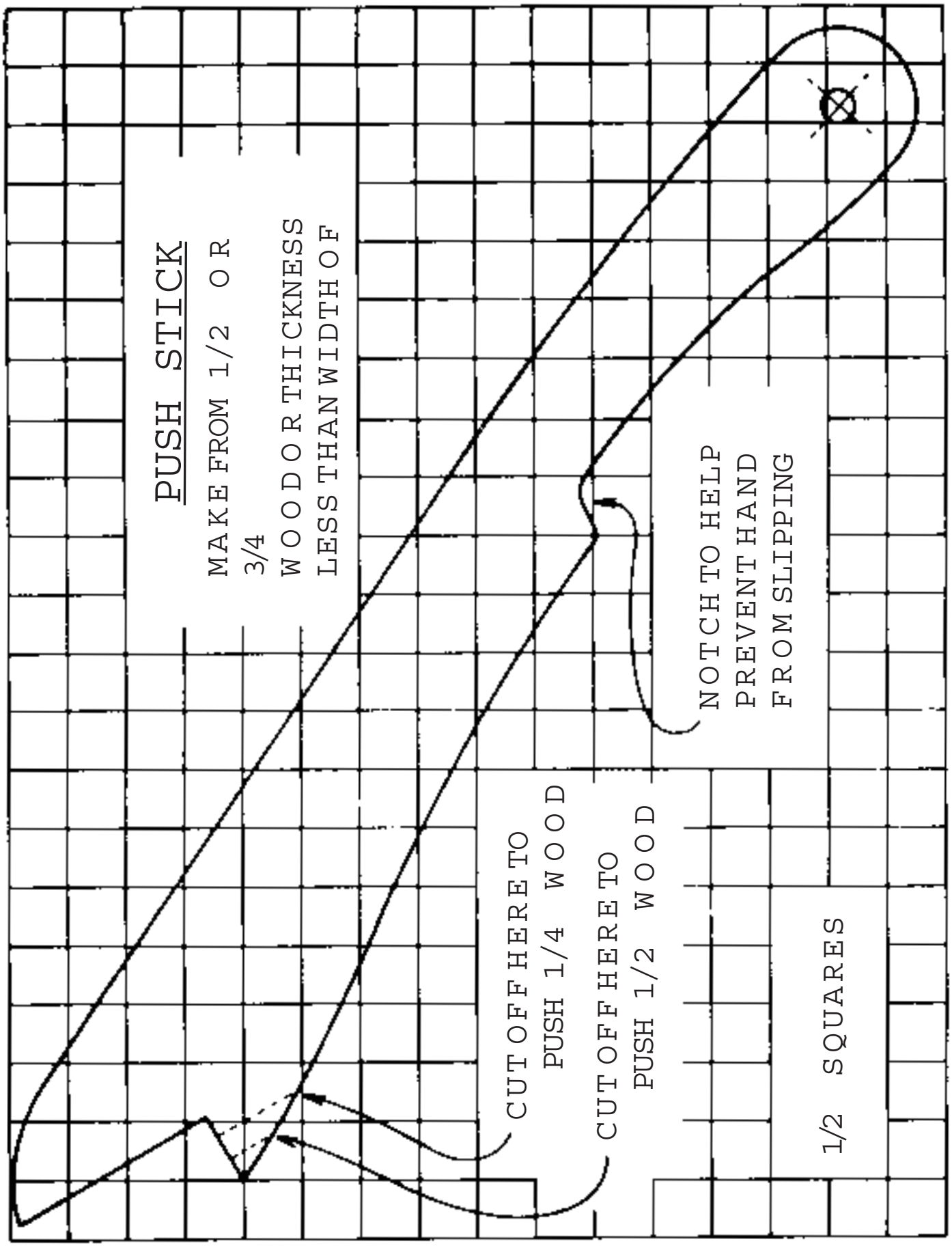

Fig. 55

DELTA

Delta Building Trades and Home Shop Machinery
Two Year Limited Warranty

Delta will repair or replace, at its expense and at its option, any Delta machine, machine part, or machine accessory which in normal use has proven to be defective in workmanship or material, provided that the customer returns the product prepaid to a Delta factory service center or authorized service station with proof of purchase of the product within two years and provides Delta with reasonable opportunity to verify the alleged defect by inspection. Delta may require that electric motors be returned prepaid to a motor manufacturer s authorized station for inspection and repair or replacement. Delta will not be responsible for any asserted defect which has resulted from normal wear, misuse, abuse or repair or alteration made or specifically authorized by anyone other than an authorized Delta Service facility or representative. Under no circumstances will Delta be liable for incidental or consequential damages resulting from defective products. This warranty is Delta s sole warranty and sets forth the customer s exclusive remedy, with respect to defective products; all other warranties, express or implied, whether of merchantability, fitness for purpose, or otherwise, are expressly disclaimed by Delta.

Printed in U.S.A.

PORTER-CABLE • DELTA SERVICE CENTERS
(CENTROS DE SERVICIO DE PORTER-CABLE • DELTA)

Parts and Repair Service for Porter-Cable • Delta Machinery are Available at These Locations
(Obtenga Refaccion de Partes o Servicio para su Herramienta en los Siguientes Centros de Porter-Cable • Delta)

ARIZONA
Tempe 85282 (Phoenix)
2400 West Southern Avenue
Suite 105
Phone: (602) 437-1200
Fax: (602) 437-2200

CALIFORNIA
Ontario 91761 (Los Angeles)
3949A East Guasti Road
Phone: (909) 390-5555
Fax: (909) 390-5554

San Leandro 94577 (Oakland)
3039 Teagarden Street
Phone: (510) 357-9762
Fax: (510) 357-7939

COLORADO
Arvada 80003 (Denver)
8175 Sheridan Blvd., Unit S
Phone: (303) 487-1809
Fax: (303) 487-1868

FLORIDA
Davie 33314 (Miami)
4343 South State Rd. 7 (441)
Unit #107
Phone: (954) 321-6635
Fax: (954) 321-6638

Tampa 33609
4538 W. Kennedy Boulevard
Phone: (813) 877-9585
Fax: (813) 289-7948

GEORGIA
Forest Park 30297 (Atlanta)
5442 Frontage Road,
Suite 112
Phone: (404) 608-0006
Fax: (404) 608-1123

ILLINOIS
Addison 60101 (Chicago)
400 South Rohlwing Rd.
Phone: (630) 424-8805
Fax: (630) 424-8895

Woodridge 60517 (Chicago)
2033 West 75th Street
Phone: (630) 910-9200
Fax: (630) 910-0360

MARYLAND
Elkridge 21075 (Baltimore)
7397-102 Washington Blvd.
Phone: (410) 799-9394
Fax: (410) 799-9398

MASSACHUSETTS
Braintree 02185 (Boston)
719 Granite Street
Phone: (781) 848-9810
Fax: (781) 848-6759

Franklin 02038 (Boston)
Franklin Industrial Park
101E Constitution Blvd.
Phone: (508) 520-8802
Fax: (508) 528-8089

MICHIGAN
Madison Heights 48071 (Detroit)
30475 Stephenson Highway
Phone: (248) 597-5000
Fax: (248) 597-5004

MINNESOTA
Minneapolis 55429
5522 Lakeland Avenue North
Phone: (763) 561-9080
Fax: (763) 561-0653

MISSOURI
North Kansas City 64116
1141 Swift Avenue
Phone: (816) 221-2070
Fax: (816) 221-2897

St. Louis 63119
7574 Watson Road
Phone: (314) 968-8950
Fax: (314) 968-2790

NEW YORK
Flushing 11365-1595 (N.Y.C.)
175-25 Horace Harding Expwy.
Phone: (718) 225-2040
Fax: (718) 423-9619

NORTH CAROLINA
Charlotte 28270
9129 Monroe Road, Suite 115
Phone: (704) 841-1176
Fax: (704) 708-4625

OHIO
Columbus 43214
4560 Indianola Avenue
Phone: (614) 263-0929
Fax: (614) 263-1238

Cleveland 44125
8001 Sweet Valley Drive
Unit #19
Phone: (216) 447-9030
Fax: (216) 447-3097

OREGON
Portland 97230
4916 NE 122 nd Ave.
Phone: (503) 252-0107
Fax: (503) 252-2123

PENNSYLVANIA
Willow Grove 19090
520 North York Road
Phone: (215) 658-1430
Fax: (215) 658-1433

TEXAS
Carrollton 75006 (Dallas)
1300 Interstate 35 N, Suite 112
Phone: (972) 446-2996
Fax: (972) 446-8157

Houston 77038
4321 Sam Houston Parkway,
West
Suite 180
Phone: (281) 260-8887
Fax: (281) 260-9989

WASHINGTON
Auburn 98001(Seattle)
3320 West Valley HWY, North
Building D, Suite 111
Phone: (253) 333-8353
Fax: (253) 333-9613

Authorized Service Stations are located in many large cities. Telephone **800-438-2486** or **731-541-6042** for assistance locating one. Parts and accessories for Porter-Cable·Delta products should be obtained by contacting any Porter-Cable·Delta Distributor, Authorized Service Center, or Porter-Cable·Delta Factory Service Center. If you do not have access to any of these, call **800-223-7278** and you will be directed to the nearest Porter-Cable·Delta Factory Service Center. Las Estaciones de Servicio Autorizadas están ubicadas en muchas grandes ciudades. Llame al **800-438-2486** ó al **731-541-6042** para obtener asistencia a fin de localizar una. Las piezas y los accesorios para los productos Porter-Cable·Delta deben obtenerse poniéndose en contacto con cualquier distribuidor Porter-Cable·Delta, Centro de Servicio Autorizado o Centro de Servicio de Fábrica Porter-Cable·Delta. Si no tiene acceso a ninguna de estas opciones, llame al **800-223-7278** y le dirigirán al Centro de Servicio de Fábrica Porter-Cable·Delta más cercano.

CANADIAN PORTER-CABLE • DELTA SERVICE CENTERS

ALBERTA
Bay 6, 2520-23rd St. N.E.
Calgary, Alberta
T2E 8L2
Phone: (403) 735-6166
Fax: (403) 735-6144

BRITISH COLUMBIA
8520 Baxter Place
Burnaby, B.C.
V5A 4T8
Phone: (604) 420-0102
Fax: (604) 420-3522

MANITOBA
1699 Dublin Avenue
Winnipeg, Manitoba
R3H 0H2
Phone: (204) 633-9259
Fax: (204) 632-1976

ONTARIO
505 Southgate Drive
Guelph, Ontario
N1H 6M7
Phone: (519) 767-4132
Fax: (519) 767-4131

QUÉBEC
1515 ave.
St-Jean Baptiste, Suite 160
Québec, Québec
G2E 5E2
Phone: (418) 877-7112
Fax: (418) 877-7123

1447, Begin
St-Laurent, (Montréal),
Québec
H4R 1V8
Phone: (514) 336-8772
Fax: (514) 336-3505